UG309: Thunderboard Sense 2 User's Guide

The Thunderboard™ Sense 2 is the ultimate multi-sensor, multi-protocol cloud inspiration kit.

The board is a small and cost effective, feature rich, prototype and development platform based on the EFR32™ Mighty Gecko Wireless System-on-Chip. The Thunderboard Sense 2 is an ideal platform for developing energy-friendly connected IoT devices. This is a true multi-protocol capable kit, supporting proprietary stacks and standard protocols such as Zigbee, Thread and Bluetooth® low energy.

The Thunderboard Sense 2 ships with a ready to use Bluetooth demo that works with a cloud connected smartphone app, showcasing easy collection of environmental and motion sensor data.

A built in SEGGER J-Link debugger ensures easy customization and development.

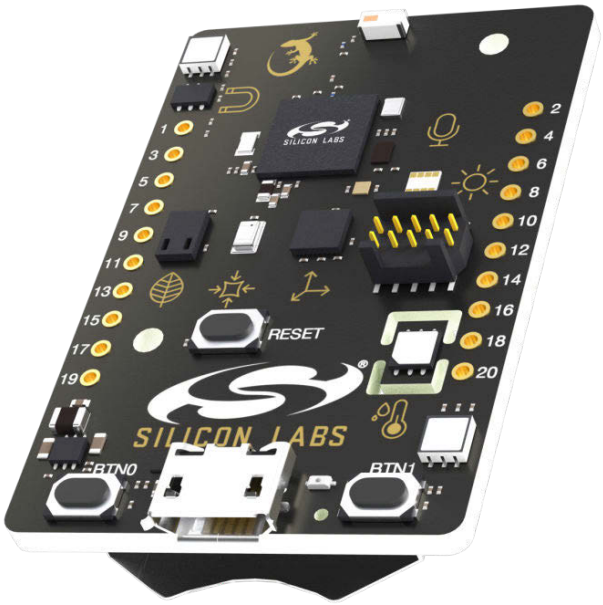

KEY POINTS

- EFR32MG12 Mighty Gecko Wireless SoC with 38.4 MHz operating frequency, 1024 kB flash and 256 kB RAM
- 2.4 GHz ceramic chip antenna
- Fine grained power-control for ultra low power operation
- Seven sensors and four high brightness controllable RGB LEDs
- User LEDs/pushbuttons
- 8-Mbit flash for OTA programming and data logging
- SEGGER J-Link on-board debugger
- Virtual COM port
- Mini Simplicity connector for AEM and packet trace using external Silicon Labs debugger
- 20-pin 2.54 mm breakout pads
- Power sources include USB, coin cell and external batteries

ON-BOARD SENSORS

- Relative humidity and temperature sensor
- UV index and ambient light sensor
- Hall effect sensor
- Indoor air quality gas sensor
- 6-axis inertial sensor
- Barometric pressure sensor
- MEMS microphone

SOFTWARE SUPPORT

- Simplicity Studio™
- Energy Profiler
- Network Analyzer

Table of Contents

1. Introduction . . . 4

1.1 Kit Contents . . . 4

1.2 Hardware Content . . . 5

1.3 Kit Hardware Layout . . . 5

2. Specifications . . . 6

2.1 Absolute Maximum Ratings . . . 6

2.2 Recommended Operating Conditions . . . 6

2.3 Current Consumption . . . 7

3. Hardware . . . 9

3.1 Block Diagram . . . 9

3.2 Power Supply . . . 10

3.3 EFR32MG12 Reset . . . 11

3.4 Sensors and RGB LEDs . . . 12

3.4.1 Si7021 Relative Humidity and Temperature Sensor . . . 13

3.4.2 Si1133 UV Index and Ambient Light Sensor . . . 13

3.4.3 BMP280 Barometric Pressure Sensor . . . 14

3.4.4 Si7210 Hall Effect Sensor . . . 14

3.4.5 CCS811 Indoor Air Quality Gas Sensor . . . 15

3.4.6 ICM-20648 6-Axis Inertial Sensor . . . 16

3.4.7 ICS-43434 MEMS Microphone . . . 17

3.4.8 RGB LEDs . . . 18

3.5 Push Buttons and RG LED . . . 19

3.6 Memory . . . 19

3.7 On-board Debugger . . . 20

3.8 Connectors . . . 21

3.8.1 Breakout Pads . . . 22

3.8.2 Mini Simplicity Connector . . . 23

3.8.3 USB Micro-B Connector . . . 23

3.8.4 Battery Connector . . . 23

4. Debugging . . . 24

4.1 On-board Debugger Considerations . . . 24

4.2 Virtual COM Port . . . 25

4.3 Mini Simplicity Connector . . . 25

5. Radio . . . 26

5.1 RF Section . . . 26

5.1.1 Description of the RF Matching . . . 26

5.1.2 RF Section Power Supply . . . 26

5.1.3 RF Matching Bill of Materials . . . 26

5.1.4 Antenna . . . 27

5.1.5 Antenna Matching Bill of Materials 27
5.2 EMC Regulations for 2.4 GHz 28
5.2.1 ETSI EN 300-328 Emission Limits for the 2400-2483.5 MHz Band 28
5.2.2 FCC15.247 Emission Limits for the 2400-2483.5 MHz Band 28
5.2.3 Applied Emission Limits 28
5.3 Radiated Power Measurements 29
5.3.1 Maximum Radiated Power Measurement 29
5.3.2 Antenna Pattern Measurement 30
5.4 EMC Compliance Recommendations 32
5.4.1 Recommendations for 2.4 GHz ETSI EN 300-328 Compliance 32
5.4.2 Recommendations for 2.4 GHz FCC 15.247 Compliance 32
6. Schematics, Assembly Drawings and BOM 33
7. Kit Revision History and Errata 34
7.1 Revision History 34
8. Board Revision History and Errata 35
8.1 Revision History 35
8.2 Errata 35
9. Document Revision History 36

1. Introduction

The Thunderboard Sense 2 (OPN: SLTB004A) has been designed to inspire customers to make battery operated IoT devices with the Silicon Labs EFR32MG12 Mighty Gecko Wireless System-on-Chip. The highlights of the board include seven different environmental sensors and four high brightness RGB LEDs accessible to the EFR32MG12 wireless MCU. The sensors and LEDs have been grouped into power domains that can be turned on and off by the application code as needed. By default, the board starts up in the lowest power operating mode, with all sensors disabled.

Programming the Thunderboard Sense 2 is easily done using a USB Micro-B cable and the on-board J-Link debugger. A USB virtual COM port provides a serial connection to the target application. Included on the board is an 8 Mbit serial flash that can be used for Over-The-Air (OTA) firmware upgrade, or as a general purpose non-volatile memory. The Thunderboard Sense 2 is supported in Simplicity Studio™, and a Board Support Package (BSP) is provided to give application developers a flying start.

Energy profiling and advanced wireless network analysis and debugging tools are available through the provided Mini Simplicity Connector using an external Silicon Labs debugger. See AN958 for more information about debugging and programming interfaces that can be used with Silicon Labs' starter kits.

Connecting external hardware to the Thunderboard Sense 2 can be done using the 20 breakout pads which present peripherals from the EFR32MG12 Mighty Gecko such as I^2C, SPI, UART and GPIOs. The breakout pads follow the same pinout as the expansion headers (EXP) on other Silicon Labs Starter Kits.

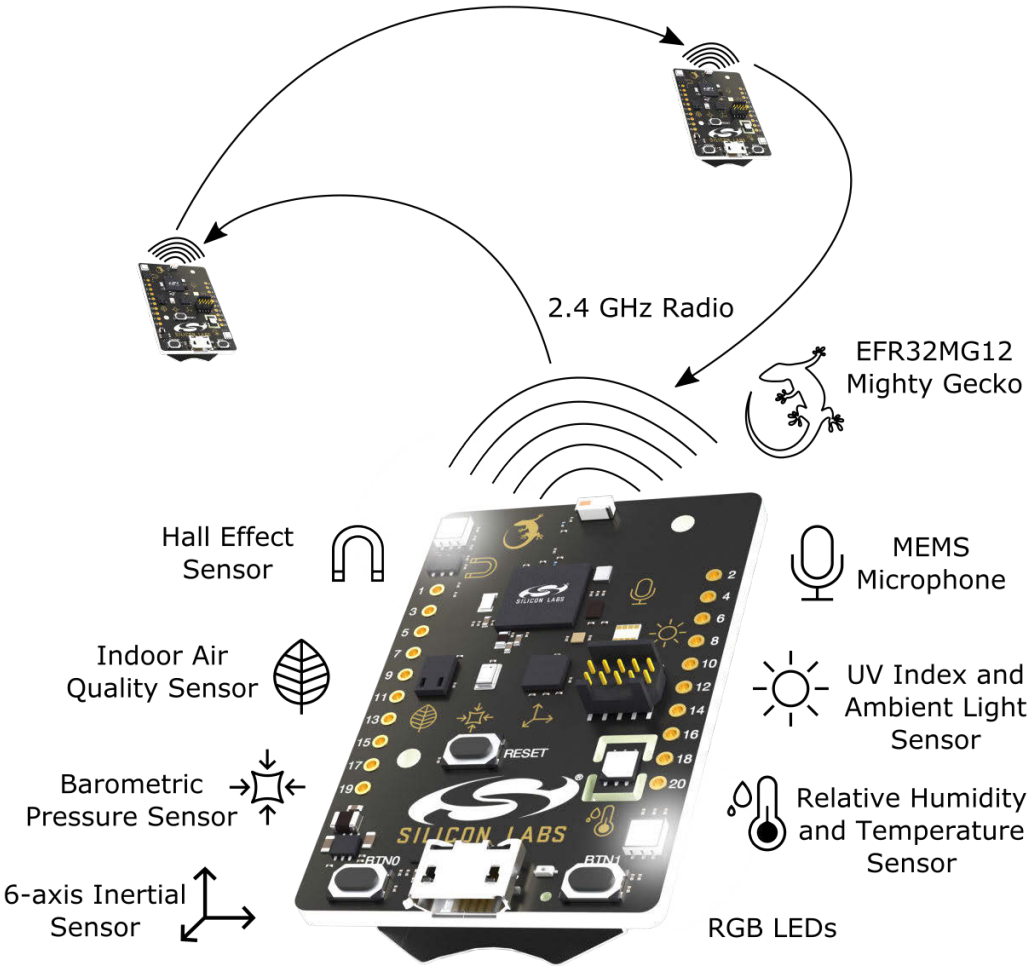

Figure 1.1. Thunderboard Sense 2

1.1 Kit Contents

The following items are included in the box:

- 1x Thunderboard Sense 2 board (BRD4166A)

1.2 Hardware Content

The following key hardware elements are included on the Thunderboard Sense 2:

- EFR32MG12 Mighty Gecko Wireless SoC with 38.4 MHz operating frequency, 1024 kB flash and 256 kB RAM
- 2.4 GHz ceramic antenna for wireless transmission
- Silicon Labs Si7021 relative humidity and temperature sensor
- Silicon Labs Si1133 UV index and ambient light sensor
- Silicon Labs Si7210 hall effect sensor
- Bosch Sensortec BMP280 barometric pressure sensor
- ams CCS811 indoor air quality gas sensor
- TDK InvenSense ICM-20648 6-axis inertial sensor
- TDK InvenSense ICS-43434 MEMS microphone
- Four high brightness RGB LEDs from Broadcom Limited (ASMT-YTB7-0AA02)
- One bi-color LED and two push buttons
- Power enable signals for fine grained power-control
- Macronix ultra low power 8-Mbit SPI flash (MX25R8035F)
- On-board SEGGER J-Link debugger for easy programming and debugging, which includes a USB virtual COM port
- Mini Simplicity connector for access to energy profiling and advanced wireless network debugging
- Breakout pads for GPIO access and connection to external hardware
- Reset button
- Automatic switchover between USB and battery power
- CR2032 coin cell holder and external battery connector

1.3 Kit Hardware Layout

The layout of the Thunderboard Sense 2 is shown below.

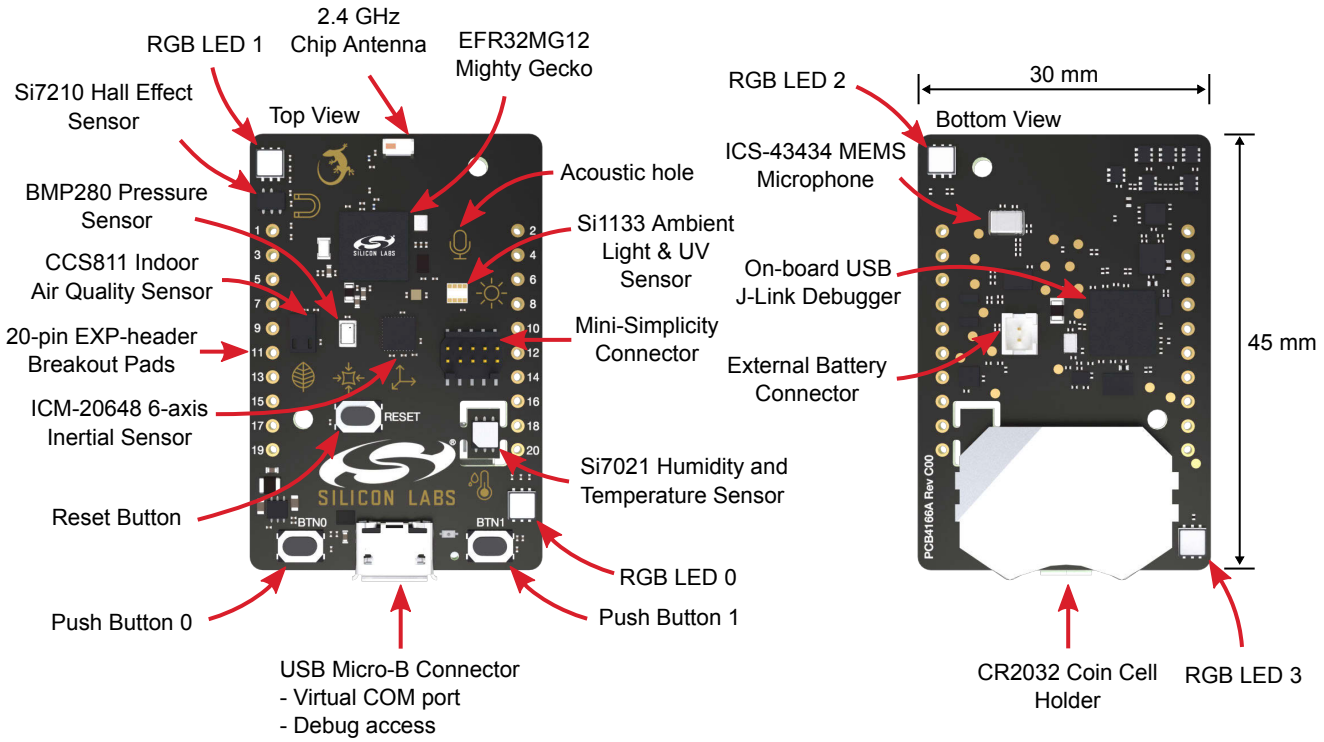

Figure 1.2. Thunderboard Sense 2 Hardware Layout

2. Specifications

2.1 Absolute Maximum Ratings

Parameter	Symbol	Min	Typ	Max	Unit
USB Input Voltage	$V_{USB-MAX}$	0		+5.5	V
Battery Input Voltage (VMCU)	$V_{BAT-MAX}$	0		+3.6	V
LDO output current	$I_{VREG-LOAD}$			300	mA
Voltage on any I/O breakout pad	V_{DIGPIN}	-0.3		VMCU+0.3	V
Current per I/O pin (sink)	I_{IOMAX}			50	mA
Current per I/O pin (source)	I_{IOMAX}			50	mA
Current for all I/O pins (sink)	$I_{IOALLMAX}$			200	mA
Current for all I/O pins (source)	$I_{IOALLMAX}$			200	mA
ESD Susceptibility HBM (Human Body Model)	V_{ESD}			2	kV

2.2 Recommended Operating Conditions

Parameter	Symbol	Min	Typ	Max	Unit
USB Supply Input Voltage	V_{USB}	+4.5	+5.0	+5.5	V
Battery Supply Input Voltage	V_{VBAT}	+2.0		+3.3	V
Supply Input Voltage (VMCU supplied externally)	V_{VMCU}	+2.0		+3.3	V
Operating Temperature [1]	T_{OP}	-35		85	˚C

1 Using the CCS811 gas sensor limits the operating temperature range from -5 to 50 ˚C.

2.3 Current Consumption

The operating current of the board greatly depends on the application. The number of enabled sensors, how often they are sampled and how often the radio is transmitting or receiving are examples of factors that influence the operating current. The table below attempts to give some indication of how different features of the board contribute to the overall power consumption. Please note that some numbers are measured values, while others are taken from the datasheets for the devices. For a full overview of the conditions that apply for a specific number from a datasheet, the reader is encouraged to read the specific datasheet.

Table 2.1. Current Consumption

Parameter	Symbol	Condition	Min	Typ	Max	Unit
EFR32 Current Consumption [1]	I_{EFR32}	EFR32 in EM0 Active mode.		3.4		mA
		Radio in receive mode.		10		mA
		Radio transmitter active @ 8 dBm		26		mA
UV/ALS Current Consumption [2]	I_{Si1133}	Standby		0.125		µA
		ADC Conversion in Progress		0.525		µA
		Responding to commands and calculating results		4.5		mA
RH/Temp Sensor Current Consumption [3]	I_{Si7021}	Standby, -40 to +85˚C		0.06	0.62	µA
		RH conversion in progress		150	180	µA
		Temperature conversion in progress		90	120	µA
		Peak I_{DD} during I^2C operations		3.5	4.0	mA
Barometric Pressure Sensor Current Consumption [4]	I_{BMP280}	Sleep current		0.1	0.3	µA
		1 Hz forced mode, pressure & temperature, lowest power		2.8	4.2	µA
		Peak current during pressure measurement		0.72	1.12	mA
		Current at temperature measurement		0.33		mA
Microphone Current Consumption[5]	I_{MIC}	Sleep mode current (f_s<3.125 kHz)		12	20	uA
		Supply current in high-performance mode with V_{DD} = 1.8 V and no load		490	550	uA
CCS811 Current Consumption [6]	I_{CCS811}	Enabled, sleep mode at 1.8 V supply		19		µA
		During measurement at 1.8 V supply		26		mA
		Average over pulse cycle at 1.8 V supply		0.7		mA
IMU Current Consumption [7]	I_{IMU}	Full-chip sleep mode at 1.8 V supply		8		µA
		Gyroscope Only, 102.3 Hz update rate at 1.8 V supply		1.23		mA
		Accelerometer only, 102.3 Hz update rate at 1.8 V supply		68.9		µA
		Gyroscope + Accelerometer, 102.3 Hz update rate at 1.8 V supply		1.27		mA
RGB LED Current Consumption [8]	I_{RGB}	Power Enabled, all LEDs off		65		µA
		Additional current for each enabled LED		10		µA
		Current per LED, all colors 100% duty cycle		29.9		mA

Parameter	Symbol	Condition	Min	Typ	Max	Unit
On-board Debugger Current Consumption [8]	I_{DBG}	USB cable inserted, current sourced from USB 5V		29		mA
		USB cable removed, current sourced from VMCU rail.		20		nA

1 From EFR32MG12 Mighty Gecko SoC datasheet
2 From Si1133 datasheet
3 From Si7021-A20 datasheet
4 From BMP280 datasheet
5 From ICS-43434 datasheet
6 From CCS811 datasheet
7 From ICM-20648 datasheet
8 Measured values

3. Hardware

The core of the Thunderboard Sense 2 is the EFR32MG12 Mighty Gecko Wireless System-on-Chip. The board also contains a multitude of sensors, including various environmental sensors and a motion sensor, all connected to the EFR32MG12. The user interface components include push buttons, a bi-colour LED and four high brightness RGB LEDs.

The key aspects of the hardware will be explained in this chapter, while in-depth information on the EFR32MG12 Mighty Gecko SoC can be found in the EFR32MG12 datasheet and reference manual. For placement and layout of the hardware components the reader is referred to section 1.3 Kit Hardware Layout.

3.1 Block Diagram

An overview of the Thunderboard Sense 2 is illustrated in the figure below.

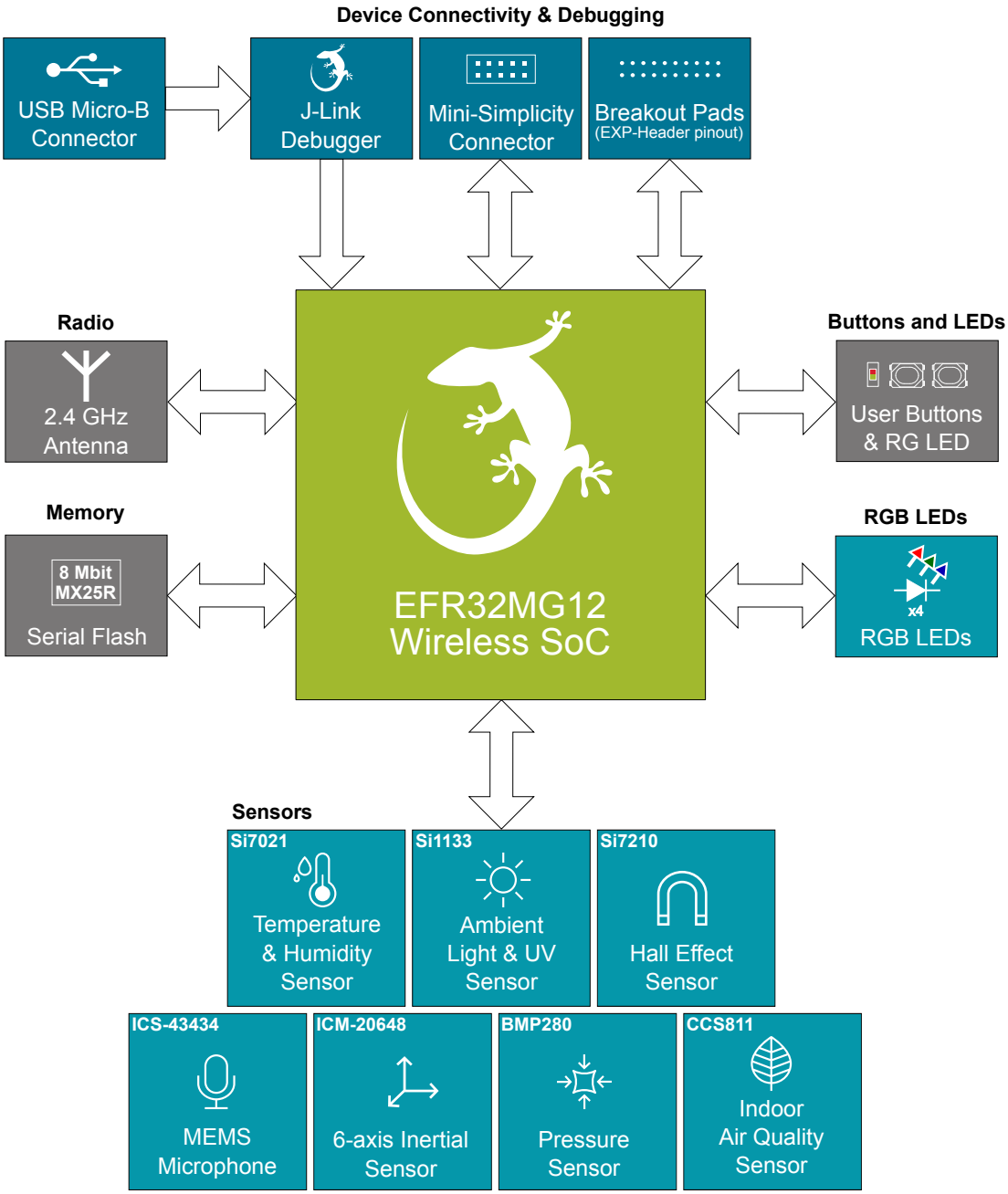

Figure 3.1. Kit Block Diagram

3.2 Power Supply

There are several ways to power the kit. The options include battery, on-board LDO from USB and the Mini Simplicity connector. Figure 3.2 Thunderboard Sense 2 Power Options on page 10 shows the power options available on the kit and illustrates the main system power architecture.

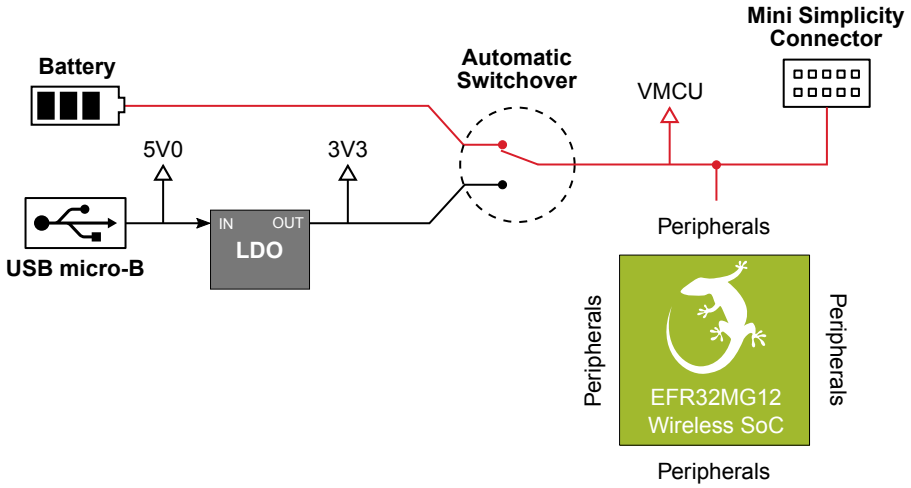

Figure 3.2. Thunderboard Sense 2 Power Options

In normal operation, power can be applied using either a USB cable connected to a power source, or a battery connected to one of the battery connectors. The 5 volt power net on the USB bus is regulated down to 3.3 volt using a low-dropout regulator. An automatic switchover circuit switches the main system power from battery power to USB power when the USB cable is inserted, and prevents charging of the battery.

Batteries can be connected to the Thunderboard Sense 2 using either the CR2032 coin cell holder or the external battery connector. A CR2032 coin cell is sufficient for low power operation that does not require high peak current. More demanding applications, such as enabling the RGB LEDs at high intensities, might need a higher capacity external battery or USB power. Do not connect batteries to both the CR2032 coin cell connector and the external battery connector at the same time, as there are no protection mechanisms between the two battery connectors.

Important: Do not connect batteries to both the CR2032 coin cell holder and the external battery connector at the same time.

A third option for powering the Thunderboard Sense 2 exists through the Mini Simplicity connector. Powering the Thunderboard Sense 2 through the Mini Simplicity connector with an external Silicon Labs debugger allows accurate current measurements using the Advanced Energy Monitoring (AEM) feature of the external debugger. This option requires that no other power sources are present on the kit, as the power is injected directly to the VMCU net. Doing so will cause conflict between the two regulators and erroneous AEM measurements. For more information about using the Mini Simplicity connector, please refer to section 4.3 Mini Simplicity Connector.

Important: When powering the board through the Mini Simplicity connector, the USB and battery power sources must be removed.

The power supply options are summarized in Table 3.1 Thunderboard Sense 2 Power Options on page 10. For placement of the USB and battery connectors the reader is referred to section 1.3 Kit Hardware Layout.

Table 3.1. Thunderboard Sense 2 Power Options

Supply mode	VIN	VMCU	3V3	5V0
USB power	4.5 - 5.5 V	On-board regulator	On-board regulator	USB VBUS
CR2032 battery	2.0 - 3.3 V	Battery voltage	Turned off and isolated	No voltage present
External battery	2.0 - 3.3 V	Battery voltage	Turned off and isolated	No voltage present
Mini Simplicity	2.0 - 3.3 V	Debugger dependent	Turned off and isolated	No voltage present

3.3 EFR32MG12 Reset

The EFR32MG12 Wireless SoC can be reset by a few different sources:

- A user pressing the RESET button.
- The on-board debugger pulling the #RESET pin low.
- An external debugger pulling the #RESET pin low.

In addition to the reset sources mentioned above, the debugger will also issue a reset to the EFR32MG12 when starting up. This means that removing power to the debugger (unplugging the USB Micro-B cable) will not generate a reset, but plugging the cable back in will cause a reset as the debugger starts up.

3.4 Sensors and RGB LEDs

The Thunderboard Sense 2 contains seven different sensors and four high brightness RGB LEDs which can be accessed from the EFR32MG12.

- Silicon Labs Si7021 relative humidity & temperature sensor
- Silicon Labs Si1133 UV index & ambient light sensor
- Silicon Labs Si7210 hall effect sensor
- Bosch Sensortec BMP280 barometric pressure sensor
- ams CCS811 indoor air quality gas sensor
- TDK InvenSense ICM-20648 6-axis inertial measurement sensor
- TDK InvenSense ICS-43434 MEMS microphone
- Four high brightness RGB LEDs from Broadcom Limited (ASMT-YTB7-0AA02)

All the sensors have enable signals which can be used to completely turn off sensors that are not in use. This allows for the lowest possible power consumption in every application. Three of the environmental sensors have been grouped together and share the same power supply enable signal, while the remaining sensors have individual enable signals. The DC/DC converter that powers the high brightness RGB LEDs can be turned off when the LEDs are not in use, and each RGB LED have furthermore its own power supply enable signal.

An overview of the connection and power topology of the sensors and RGB LEDs are given in the figure below.

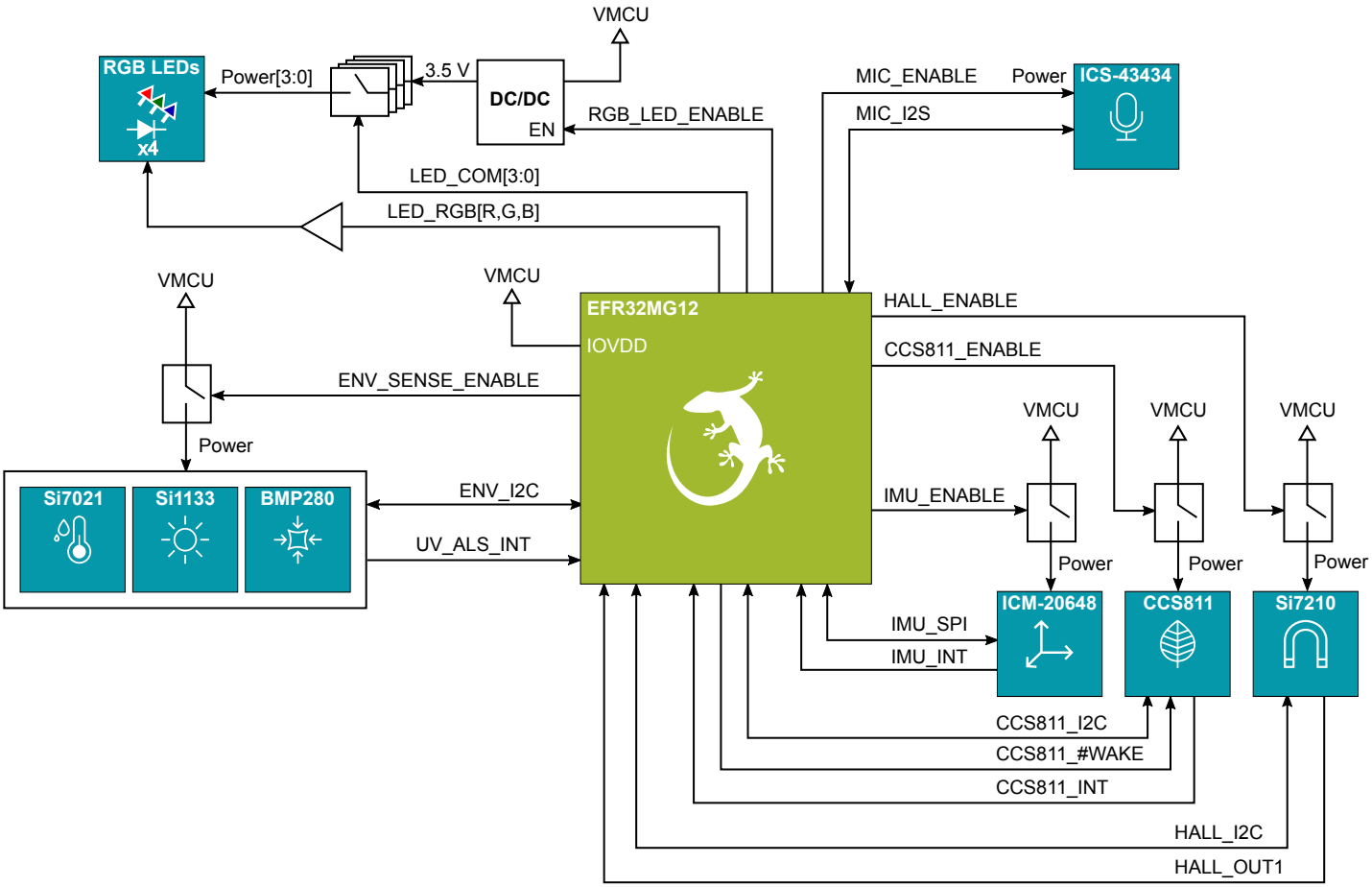

Figure 3.3. Sensors and RGB LEDs

3.4.1 Si7021 Relative Humidity and Temperature Sensor

The Si7021 I^{2}C relative humidity and temperature sensor is a monolithic CMOS IC integrating humidity and temperature sensor elements, an analog-to-digital converter, signal processing, calibration data, and an I^{2}C Interface. The patented use of industry-standard, low-K polymeric dielectrics for sensing humidity enables the construction of low-power, monolithic CMOS Sensor ICs with low drift and hysteresis, and excellent long term stability.

The Si7021 offers an accurate, low-power, factory-calibrated digital solution ideal for measuring humidity, dew-point, and temperature, in applications ranging from HVAC/R and asset tracking to industrial and consumer platforms.

On Thunderboard Sense 2, the Si7021 is powered down by default through a power isolation switch. The power switch must therefore be enabled by setting PF9 high before it can be accessed through the I^{2}C interface. Note that both the Si7021, Si1133 and the BMP280 all share the same power isolation switch and I^{2}C interface, and hence, all the sensors are powered up once PF9 is set high. The hardware connection is illustrated in Figure 3.4 Si7021 Relative Humidity and Temperature Sensor on page 13.

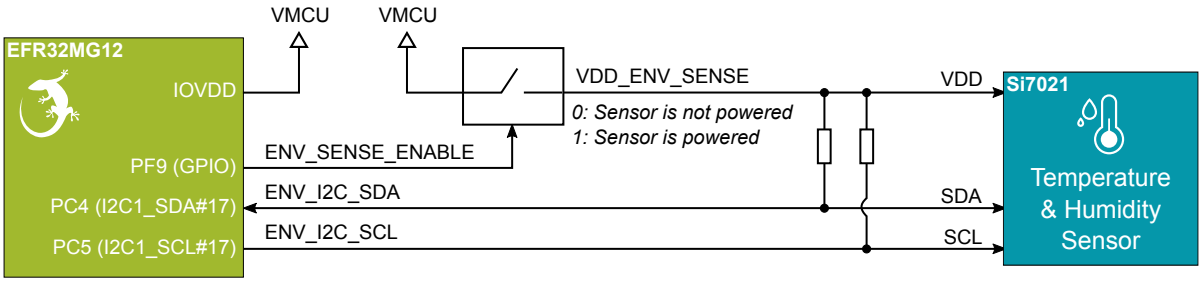

Figure 3.4. Si7021 Relative Humidity and Temperature Sensor

Note: Due to self-heating from the on-board LDO, temperature measurements are slightly off when running off USB power. More accurate temperature measurements are achieved when powering the board with a battery or through the Mini Simplicity connector.

3.4.2 Si1133 UV Index and Ambient Light Sensor

The Si1133 is a UV index and ambient light sensor with I^{2}C digital interface and programmable event interrupt output. This sensor IC includes dual 23-bit analog-to-digital converters, integrated high-sensitivity array of UV, visible and infrared photodiodes, and digital signal processor.

On Thunderboard Sense 2, the Si1133 is powered down by default through a power isolation switch. The power switch must therefore be enabled by setting PF9 high before it can be accessed through the I^{2}C interface. Note that both the Si1133, Si7021 and the BMP280 all share the same power isolation switch and I^{2}C interface, and hence, all the sensors are powered up once PF9 is set high. The hardware connection is illustrated in Figure 3.5 Si1133 UV and Ambient Light Sensor on page 13.

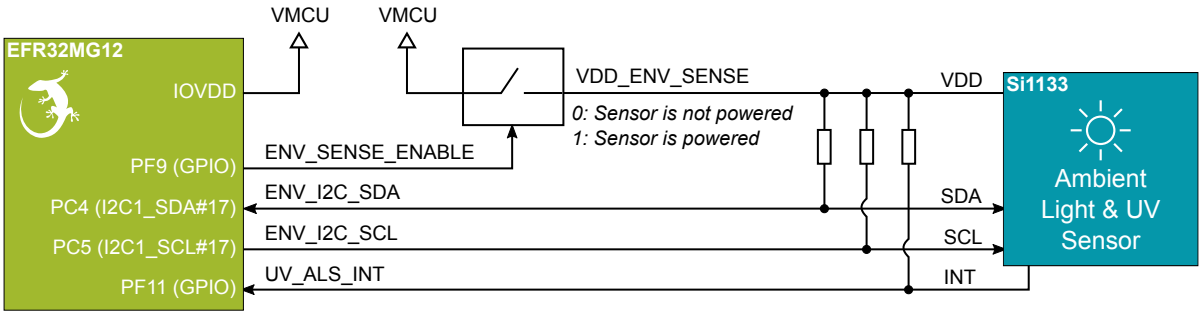

Figure 3.5. Si1133 UV and Ambient Light Sensor

3.4.3 BMP280 Barometric Pressure Sensor

The BMP280 is a combined absolute barometric pressure sensor and temperature sensor with a digital interface supporting both SPI and I^{2}C. No external sensing elements are needed, and the device has an integrated ADC and ASIC with built-in configurable IIR filter to suppress noise. Selectable oversampling rates provides trade off between low power and high resolution, and an option to skip either temperature or pressure measurement is available in case one or the other is unnecessary.

On Thunderboard Sense 2, the BMP280 is powered down by default through a power isolation switch. The power switch must therefore be enabled by setting PF9 high before it can be accessed through the I^{2}C interface. Note that both the BMP280, Si1133 and Si7021 all share the same power isolation switch and I^{2}C interface, and hence, all the sensors are powered up once PF9 is set high. The hardware connection is illustrated in Figure 3.6 BMP280 Absolute Pressure Sensor on page 14.

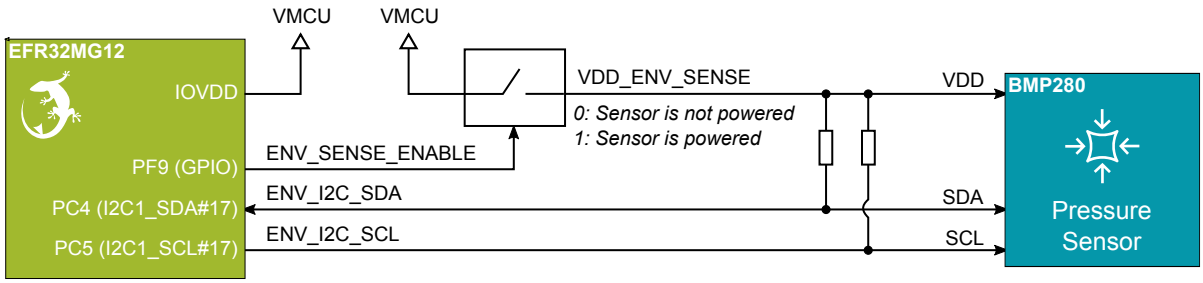

Figure 3.6. BMP280 Absolute Pressure Sensor

3.4.4 Si7210 Hall Effect Sensor

The Si7210 family of Hall effect sensors from Silicon Labs combines a chopper-stabilized Hall element with a low-noise analog amplifier, 13-bit analog-to-digital converter, and an I^{2}C interface. Leveraging Silicon Labs' proven CMOS design techniques, the Si7210 family incorporates digital signal processing to provide precise compensation for temperature and offset drift.

The 13-bit magnetic field strength can be read through the I^{2}C interface at any time. The Si7210 also features an output pin which can provide a digital alert when the measured field is above or below a programmable threshold value.

Applications for the Si7210 include mechanical position sensing in consumer, industrial and automotive applications, reed switch replacement, fluid level measurement, speed sensing and control knobs and switches. Please refer to the Si7210 datasheet for more information.

On Thunderboard Sense 2, the Si7210 is powered down by default through a power isolation switch. The power switch must therefore be enabled by setting PB10 high before it can be accessed through the I^{2}C interface. The hardware connection is illustrated in Figure 3.7 Hall Effect Sensor on page 14.

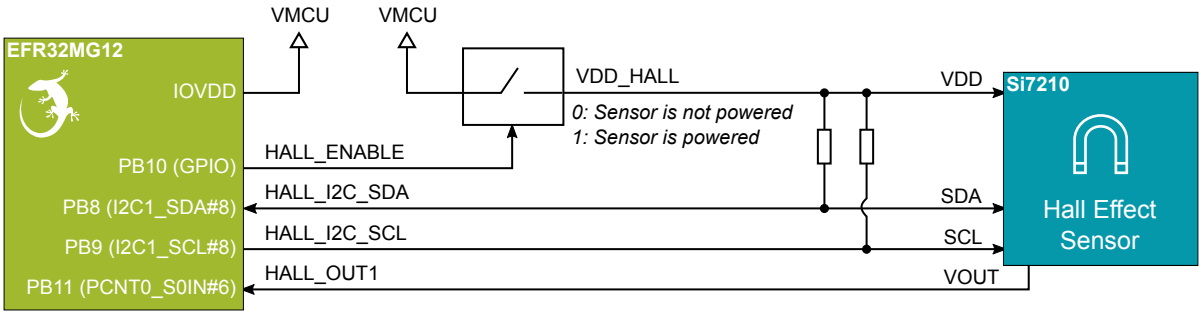

Figure 3.7. Hall Effect Sensor

3.4.5 CCS811 Indoor Air Quality Gas Sensor

The CCS811 is a digital gas sensor solution for indoor air quality monitoring (IAQ). The sensor detects a wide range of volatile organic compounds (VOCs) and it calculates and provides the equivalent CO_2 concentration and the total volatile organic compound concentration. The device uses the I^2C interface for data transfer.

On Thunderboard Sense 2, the CCS811 is powered down by default through a power isolation switch. To use the sensor, power must be enabled to the sensor, and it has to be woken up from sleep using the sensor's dedicated "wake" pin. Power is enabled by setting PF14 high and the sensor is woken up by pulling PF15 low. The CCS811 has furthermore an interrupt pin that can generate an interrupt signal whenever a new sample is ready. The hardware connection is illustrated in Figure 3.8 CCS811 Indoor Air Quality and Gas Sensor on page 15.

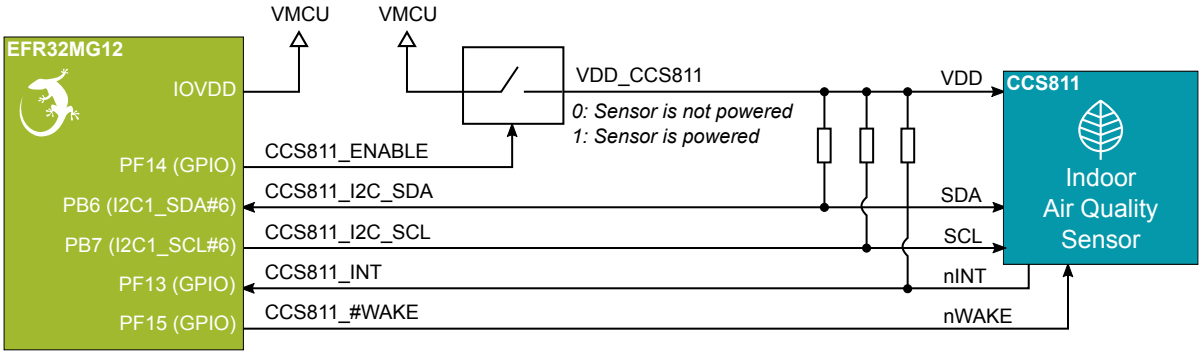

Figure 3.8. CCS811 Indoor Air Quality and Gas Sensor

3.4.6 ICM-20648 6-Axis Inertial Sensor

The ICM-20648 is a 6-axis inertial sensor consisting of a 3-axis gyroscope and a 3-axis accelerometer. The sensor detects acceleration and angular rate in and around the X-, Y- and Z-axes with integrated 16-bit ADCs and programmable digital filters. The device supports both the SPI and I^2C interface.

On Thunderboard Sense 2, the inertial sensor is located in the center of the board. The coordinate system and rotation of the sensor follows the right-hand rule, and the spatial orientation of the board is shown in Figure 3.9 Thunderboard Sense 2 Spatial Orientation on page 16.

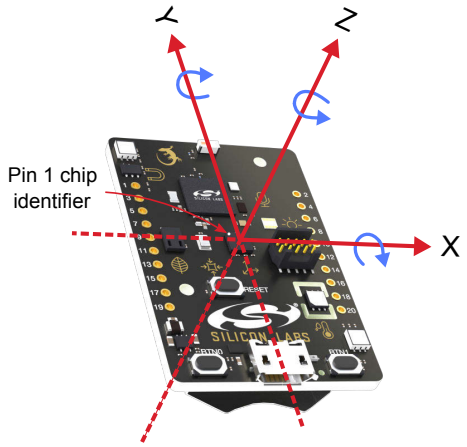

Figure 3.9. Thunderboard Sense 2 Spatial Orientation

On Thunderboard Sense 2, the ICM-20648 is powered down by default through a power isolation switch. The power switch must therefore be enabled by setting PF8 high before it can be accessed through the SPI interface. The ICM-20648 has furthermore an interrupt pin which, when enabled, generates an interrupt signal whenever a new sample is ready. The hardware connection is illustrated in Figure 3.10 ICM-20648 Nine-axis Inertial Sensor on page 16.

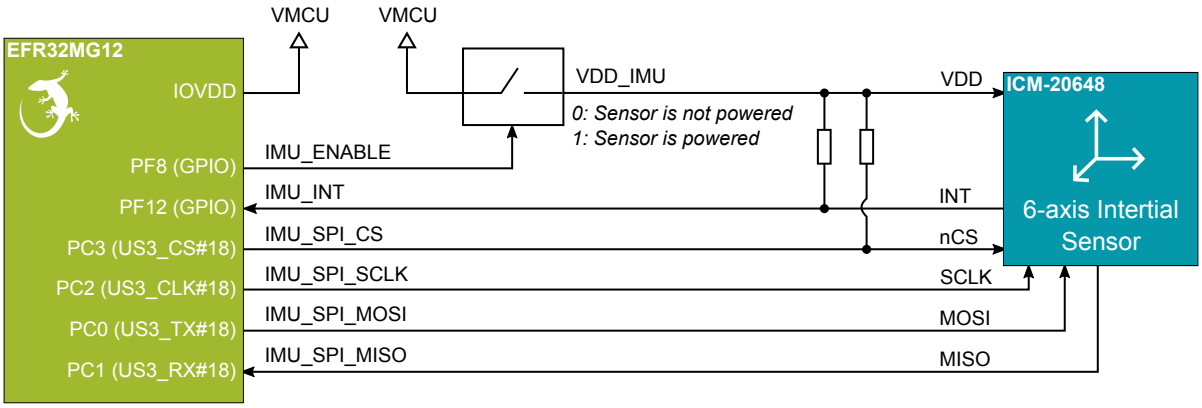

Figure 3.10. ICM-20648 Nine-axis Inertial Sensor

3.4.7 ICS-43434 MEMS Microphone

The ICS-43434 is an omnidirectional MEMS microphone with a wideband frequency response and a digital I^2S output. The sensor is a complete solution and includes, amongst others, a MEMS sensor, signal conditioning, ADC, filters and different operating modes. The ICS-43434 is a bottom port microphone, and it is placed on the bottom side of Thunderboard Sense 2 with an acoustic ventilation hole going through to the top side. This hole lets sound waves into the microphone package.

On Thunderboard Sense 2, the ICS-43434 is powered using the GPIO pin on the EFR32MG12. The sensor is powered by setting PF10 high, and powered down by pulling the pin low. The hardware connection is illustrated in Figure 3.11 ICS-43434 MEMS Microphone on page 17.

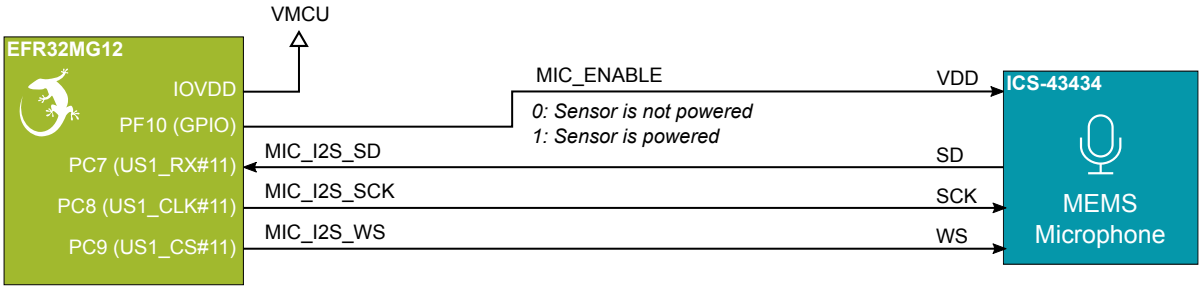

Figure 3.11. ICS-43434 MEMS Microphone

3.4.8 RGB LEDs

The RGB LEDs are driven from a 3.5 V rail that is generated by a boost regulator. This ensures that the color representation remains constant even if the battery voltage drops below the LED forward voltage (V_f).

The boost regulator is enabled by setting PJ14 high, and each LED can be individually enabled by setting PI0, PI1, PI2 or PI3 high. The cathodes of the same color of each LED are tied together, so that all enabled RGB LEDs will show the same color. The RGB LED hardware includes fast low-side drivers, so that any color can be created using the TIMER peripheral in the EFR32 in pulse width modulation (PWM) mode. The hardware connection is illustrated in Figure 3.12 LEDs on page 18.

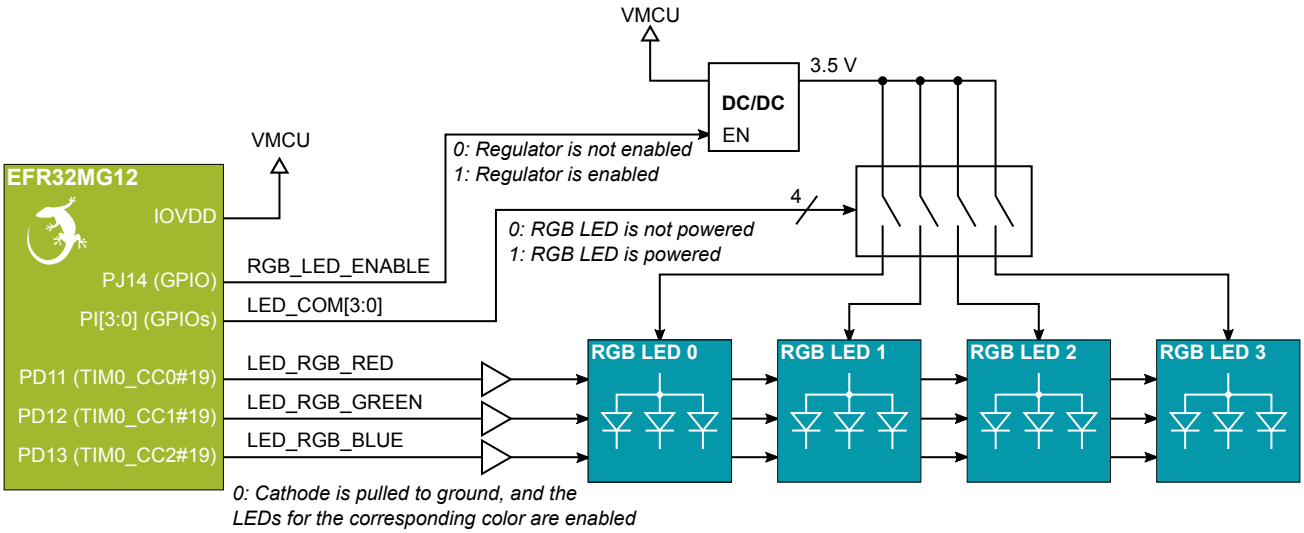

Figure 3.12. LEDs

Because of the high current consumption, the RGB LEDs are not suitable for use in a coin cell application. Even with a low duty cycle PWM, the pulsed current can easily exceed 100 mA when all LEDs are enabled. Because of the boost regulator, the actual current drain increases slightly as the battery voltage decreases.

Table 3.2. RGB LED Typical Power Consumption at 3.3V VMCU

Color	1x LED	2x LEDs	3x LEDs	4x LEDs
Red, 100% duty cycle	13.4 mA	26.8 mA	40.2 mA	53.6 mA
Green, 100% duty cycle	8.0 mA	16.0 mA	24.0 mA	32.0 mA
Blue, 100% duty cycle	8.5 mA	17.0 mA	25.5 mA	34.0 mA
All, 100% duty cycle (white)	29.9 mA	59.8 mA	89.7 mA	119.6 mA

Turning off the boost regulator and the individual RGB LEDs reduces the quiescent current to about 100 nA typically. Turning on the boost regulator increases the quiescent current to about 65 µA, even with no LEDs enabled. Due to the high side drivers, each enabled LED adds an additional 10 µA of quiescent current even if the red, green and blue signals are all off.

3.5 Push Buttons and RG LED

The kit has two user push buttons. Push button 0 is located at the bottom left corner of the board, while push button 1 is located at the bottom right corner of the board. The push buttons are connected to pin PD14 and PD15 respectively. Both push buttons are active low and de-bounced by an RC filter with a time constant of 1 ms.

The board contains a small bi-color LED that is connected to PD8 and PD9 through current limiting resistors. The current consumption of this LED is fairly low compared to the RGB LEDs, so the use of this LED is suitable for coin cell applications. The red LED consumes about 0.8 mA @ 3.3 V, and the green LED about 0.7 mA @ 3.3 V.

The hardware connection is illustrated in Figure 3.13 Push Buttons on page 19.

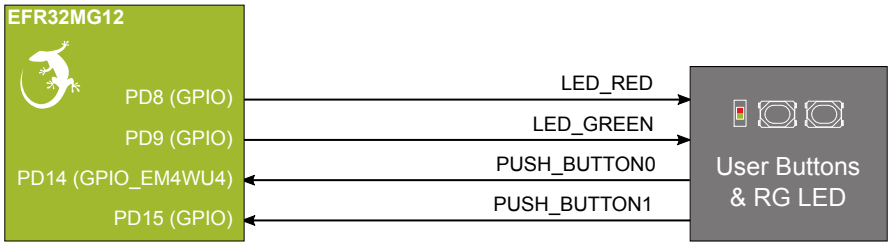

Figure 3.13. Push Buttons

3.6 Memory

The Thunderboard Sense 2 is equipped with an 8-Mbit Macronix SPI Flash that is connected directly to the EFR32MG12 Mighty Gecko. Figure 3.14 Serial Flash on page 19 shows how the serial flash is connected to the EFR32MG12.

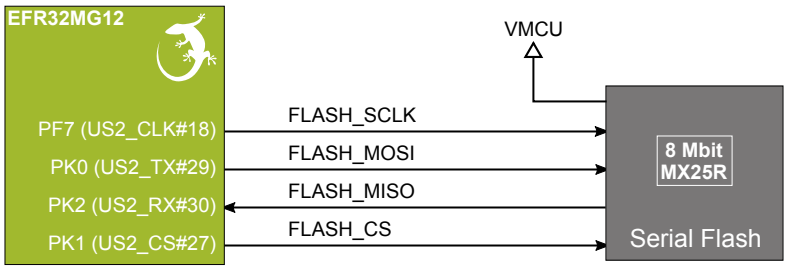

Figure 3.14. Serial Flash

The MX25R series are ultra low power serial flash devices, so there is no need for a separate enable switch to keep current consumption down. However, it is important that the flash is always put in deep power down mode when not used. This is done by issuing a command over the SPI interface. In deep power down, the MX25R typically adds approximately 100 nA to the current consumption.

3.7 On-board Debugger

The Thunderboard Sense 2 contains a microcontroller separate from the EFR32MG12 Mighty Gecko that provides the user with a on-board J-Link debugger through the USB micro-B port. This microcontroller is referred to as the "On-board Debugger", and is not programmable by the user. When the USB cable is removed, the on-board debugger goes into a very low power shutoff mode (EM4S), consuming around 20 nA typically.

In addition to providing code download and debug features, the on-board debugger also presents a virtual COM port for general purpose application serial data transfer.

Figure 3.15 On-Board Debugger Connections on page 20 shows the connections between the target EFR32MG12 device and the on-board debugger. The figure also shows the presence of the Mini Simplicity Connector, and how this is connected to the same I/O pins.

Please refer to chapter 4. Debugging for more details on debugging.

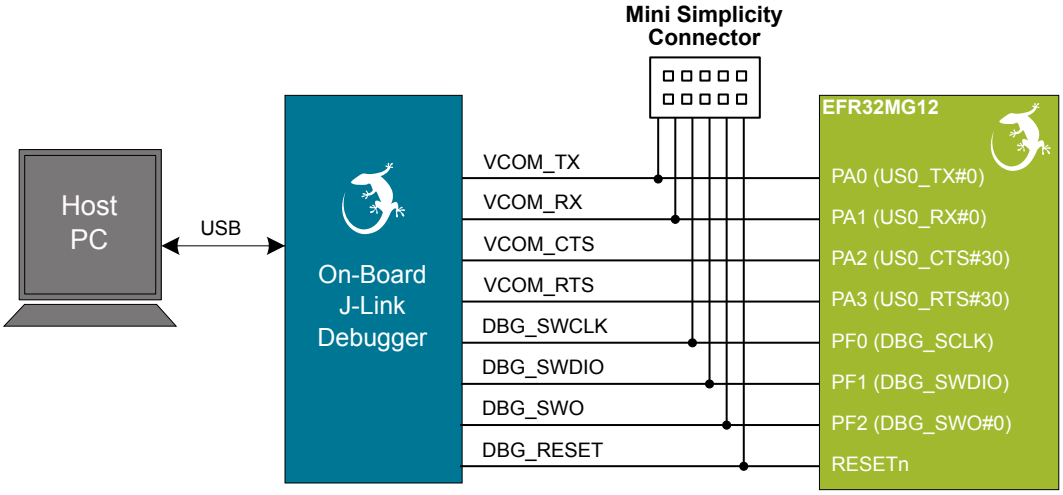

Figure 3.15. On-Board Debugger Connections

3.8 Connectors

Featured on the Thunderboard Sense 2 is a Mini Simplicity connector, a USB Micro-B connector and 20 breakout pads that follow the expansion header pinout. The connectors are placed on the top side of the board, and their placement and pinout can be seen in Figure 3.16 Thunderboard Sense 2 Connectors on page 21. For additional information on the connectors see the following sub chapters.

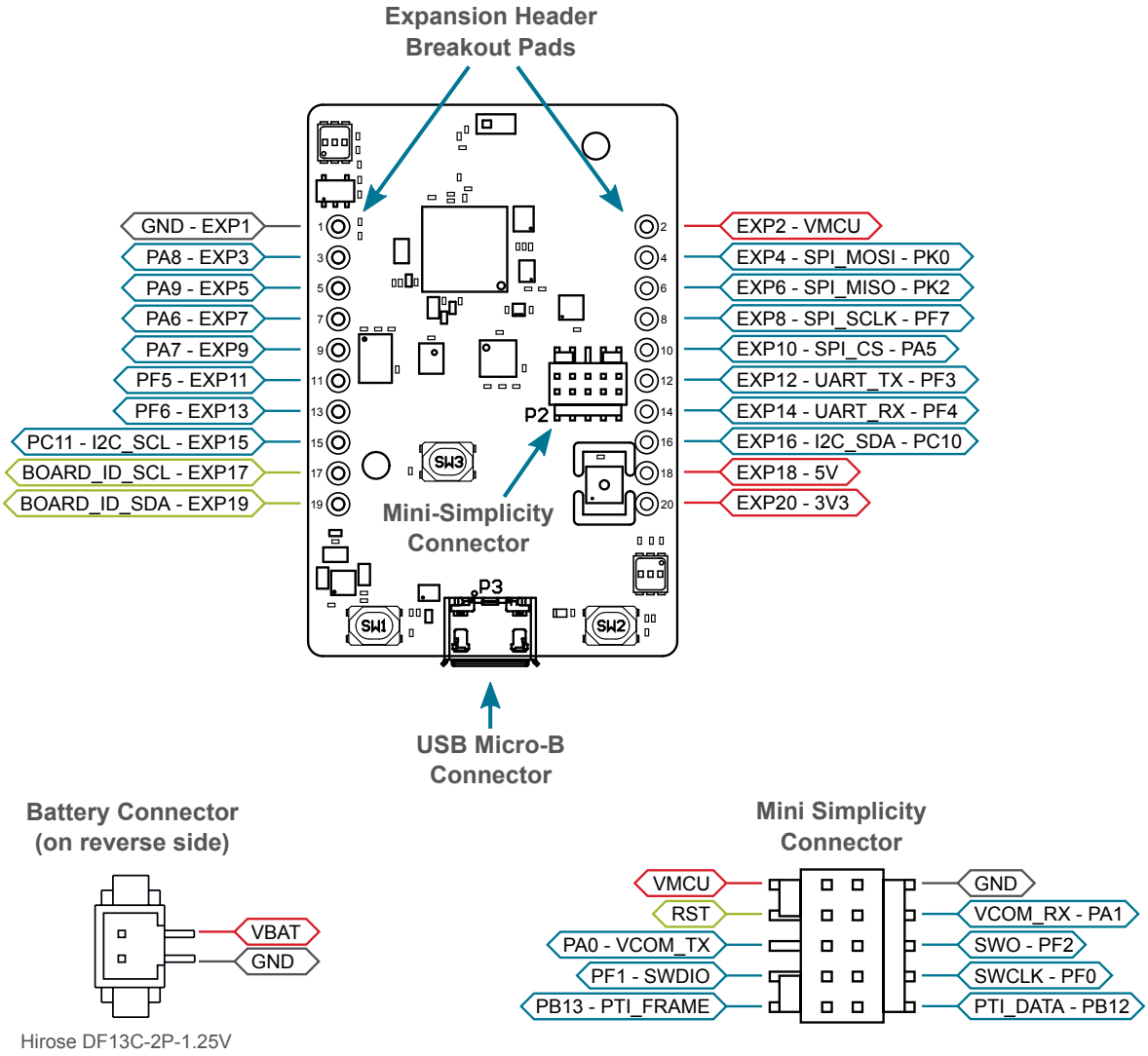

Figure 3.16. Thunderboard Sense 2 Connectors

3.8.1 Breakout Pads

20 breakout pads, which follow the expansion header pinout, are provided and allow connection of peripherals or add-on boards. Ten of the pads are located along the left side of the board while the remaining ten are located on the right side of the board. The breakout pads contain a number of I/O pins that can be used with most of the EFR32MG12 Mighty Gecko's features. Additionally, the VMCU (main board power rail), 3.3V (LDO regulator output) and 5V power rails are also exported.

The breakout pads are pinned out similar to the expansion header found on other Silicon Labs Starter Kits, which ensures that commonly used peripherals such as SPI, UART and I^2C buses are available on fixed locations. The rest of the pins are used for general purpose IO. This allows the definition of expansion boards that can plug into a number of different Silicon Labs starter kits.

The pin-routing on the EFR32 is very flexible, so most peripherals can be routed to any pin. However, some pins are shared between the breakout pads and other functions on the Thunderboard Sense 2. Table 3.3 Expansion Header Pinout on page 22 includes an overview of the expansion header and functionality that is shared with the kit.

Table 3.3. Expansion Header Pinout

Pin	Connection	EXP Header Function	Shared Feature	Peripheral Mapping
Right Side Breakout Pins				
2	VMCU	EFR32MG12 voltage domain, included in AEM measurements.		
4	PK0	SPI_MOSI	SPI Flash	US2_TX #29
6	PK2	SPI_MISO	SPI Flash	US2_RX #30
8	PF7	SPI_SCLK	SPI Flash	US2_CLK #18
10	PA5	SPI_CS		US2_CS #29
12	PF3	UART_TX		LEU0_TX #27
14	PF4	UART_RX		LEU0_RX #27
16	PC10	I2C_SDA		I2C0_SDA #15
18	5V	Board USB voltage		
20	3V3	Board controller supply		
Left Side Breakout Pins				
1	GND	Ground		
3	PA8	GPIO		
5	PA9	GPIO		
7	PA6	GPIO		
9	PA7	GPIO		
11	PF5	GPIO		
13	PF6	GPIO		
15	PC11	I2C_SCL		I2C0_SCL #15
17	BOARD_ID_SCL	Connected to Board Controller for identification of add-on boards.		
19	BOARD_ID_SDA	Connected to Board Controller for identification of add-on boards.		

3.8.2 Mini Simplicity Connector

The Mini Simplicity connector featured on the Thunderboard Sense 2 allows the use of an external debugger such as a Silicon Labs Wireless Starter Kit (WSTK) with the board. In addition to providing serial wire debug (SWD) and virtual COM port functionality, the WSTK can also support advanced energy profiling and wireless network analysis and debugging tools. The pinout, which is described in Table 3.4 Mini Simplicity Connector Pin Descriptions on page 23, is referenced from the EFR32MG12.

Table 3.4. Mini Simplicity Connector Pin Descriptions

Pin number	Connection	Function	Description
1	VMCU	VAEM	Target voltage on the debugged application. Supplied and monitored by the AEM when powered by a WSTK with its power selection switch in the "AEM" position.
2	GND	GND	Ground.
3	EFR32MG12 reset pin	DBG_RST	Reset.
4	PA1	VCOM_RX	Virtual COM Rx.
5	PA0	VCOM_TX	Virtual COM Tx.
6	PF2	DBG_SWO	Serial Wire Output.
7	PF1	DBG_SWDIO	Serial Wire Data.
8	PF0	DBG_SWCLK	Serial Wire Clock.
9	PB13	PTI_FRAME	Packet Trace Frame Signal.
10	PB12	PTI_DATA	Packet Trace Data Signal.

3.8.3 USB Micro-B Connector

The USB port can be used for uploading code, debugging and as Virtual COM port, as described in section 4. Debugging.

3.8.4 Battery Connector

A small battery connector can be found on the secondary side of the board, above the CR2032 coin cell holder. This is a 1.25 mm pitch miniature crimping connector from Hirose (P/N: DF13C-2P-1.25V).

The positive supply input pin on this connector (VBAT) is directly connected to the coin cell holder +terminal, so only one battery should be used at a time to prevent current flow between batteries. The Thunderboard Sense 2 contains a small transistor switch circuit that protects the board from reverse polarity on VBAT. When the USB cable is inserted, the transistor is turned off to prevent the on-board LDO from charging the battery connected either to the battery connector or to the coin cell holder.

P/N for mating products:

- Single row socket, 2 pos: Hirose DF13-2S-1.25C
- Crimping contact: Hirose DF13-2630SCFA

It is also possible to source pre-crimped cables from catalog distributors such as Digi-Key.

4. Debugging

The Thunderboard Sense 2 contains an on-board fully functional SEGGER J-Link Debugger that interfaces to the target EFR32MG12 using the Serial Wire Debug (SWD) interface. The debugger allows the user to download code and debug applications running in the target EFR32MG12. Additionally, it also provides a virtual COM port (VCOM) to the host computer that is directly connected to the target device's serial port, for general purpose communication between the running application and the host computer.

An external Silicon Labs debugger can also be used with the board by connecting it to the Mini Simplicity connector. This allows advanced debugging features as described in section 4.3 Mini Simplicity Connector. A Silicon Labs Wireless Starter Kit (WSTK) is a good example of a debugger that can be used with the Thunderboard Sense 2 when connected through a debug adapter.

Figure 4.1 Thunderboard Sense 2 Debugging Possibilities on page 24 show the possible debug options.

Important: When connecting an external debugger that sources voltage to the VMCU net, the USB and battery power sources must be removed. Failure to do so will create power conflicts and erroneous current measurements with AEM.

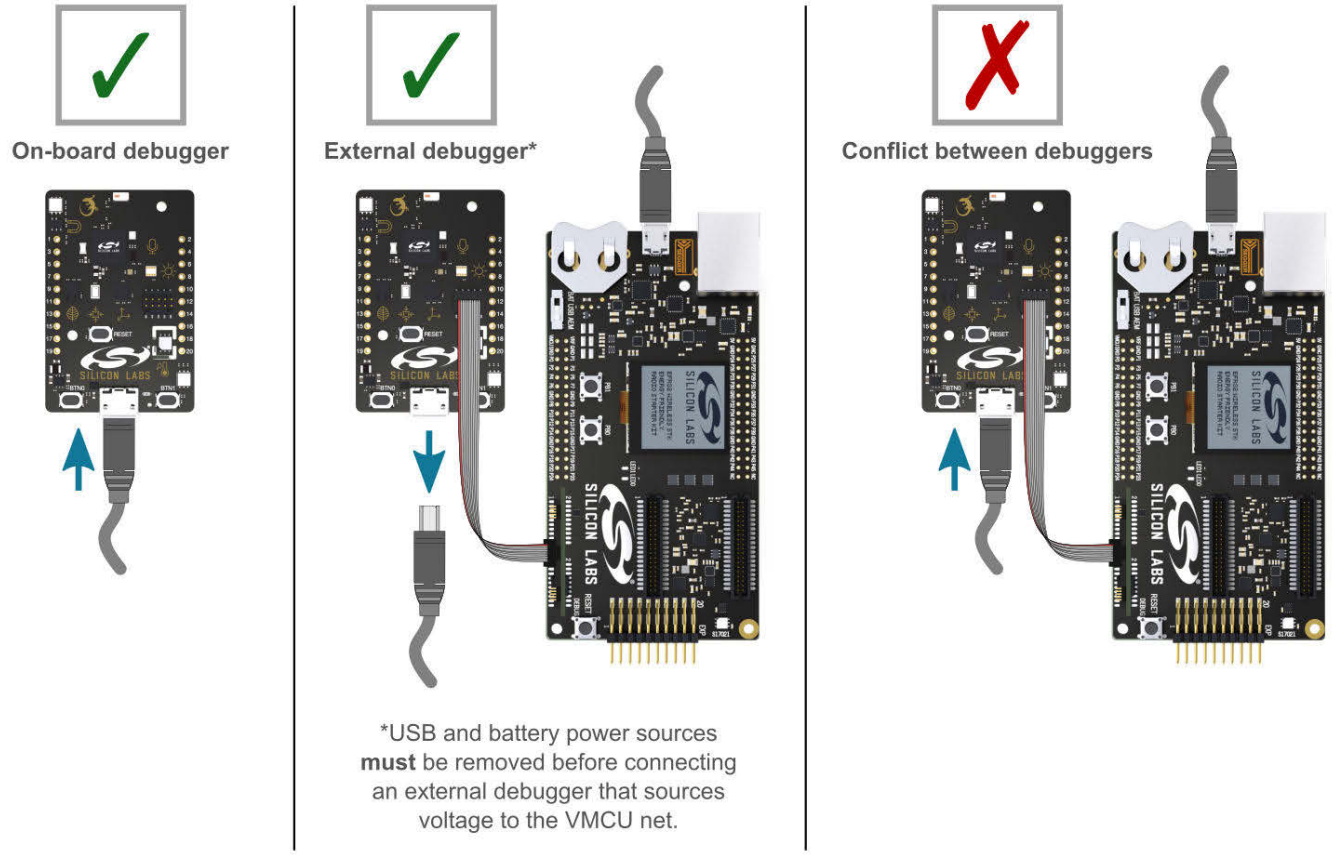

Figure 4.1. Thunderboard Sense 2 Debugging Possibilities

4.1 On-board Debugger Considerations

The on-board debugger is a SEGGER J-Link debugger running on an EFM32 Giant Gecko. The debugger is directly connected to the SWD and VCOM pins of the target EFR32MG12.

When the USB cable is inserted, the on-board debugger is automatically active, and takes control of the SWD and VCOM interfaces. This means that serial wire debug and communication will *not* work with an external WSTK connected through the Mini Simplicity Connector at the same time. The on-board LDO is also activated which then powers the board.

When the USB cable is removed, the on-board debugger goes into a very low power shutoff mode (EM4S), consuming around 20 nA typically. This means that an application running off batteries does not need to worry about the power consumption of the on-board debugger. Since the I/O voltage rail of the debugger remains powered in the battery operated mode, the pins connected to the SWD and VCOM interfaces maintain proper isolation and prevent leakage currents.

4.2 Virtual COM Port

The virtual COM port is a connection to a USART of the target EFR32MG12, and allows serial data to be sent and received from the device. The on-board debugger presents this as a virtual COM port on the host computer that shows up when the USB cable is inserted. Alternatively, the VCOM port can also be used through the Mini Simplicity Connector with an external WSTK.

Data is transferred between the host computer and the debugger through the USB connection, which emulates a serial port using the USB Communication Device Class (CDC). From the debugger the data is passed on to the target device through a physical UART connection.

The serial format is 115200 bps, 8 bits, no parity and 1 stop bit. Flow control signals RTS and CTS are provided, but not supported by the current firmware implementation. The current firmware also does not support changing the baud rate.

Using the VCOM port through the Mini Simplicity Connector with an external WSTK works in a similar way, but requires that the on-board debugger is unplugged. The board controller on the WSTK then makes the data available over USB (CDC) or an IP socket.

Note: Changing the baud rate for the COM port on the PC side does not influence the UART baud rate between the debugger and the target device.

4.3 Mini Simplicity Connector

The Mini Simplicity connector is a 10-pin 1.27 mm pitch connector that gives access to advanced debugging features. Debugging with an external WSTK allows:

- Debugging of the target device through SWD
- Communication using the VCOM port
- Packet Trace Interface
- Advanced Energy Monitor

Please note that the Mini Simplicity Connector *cannot* be used at the same time as the on-board debugger is active (USB cable is plugged in). For information on how to correctly connect to the kit, see Figure 4.1 Thunderboard Sense 2 Debugging Possibilities on page 24. The recommended way to power the board when using the Mini Simplicity Connector is to use the AEM voltage supply of the WSTK. Power-cycling of the board, if necessary, can easily be done by flipping the power switch on the WSTK to "BAT" and back to "AEM".

It is also possible to have the Thunderboard Sense 2 powered by a battery, and still use the Mini Simplicity Connector for debugging and communication. In this case the power switch on the WSTK must be set to the "BAT" position, to prevent a power conflict. In this case level shifters on the WSTK itself takes care of interfacing to different voltage levels on the Thunderboard Sense 2.

5. Radio

5.1 RF Section

This section gives a short introduction to the RF section of the BRD4166A board.

The schematic of the RF section is shown in the figure below.

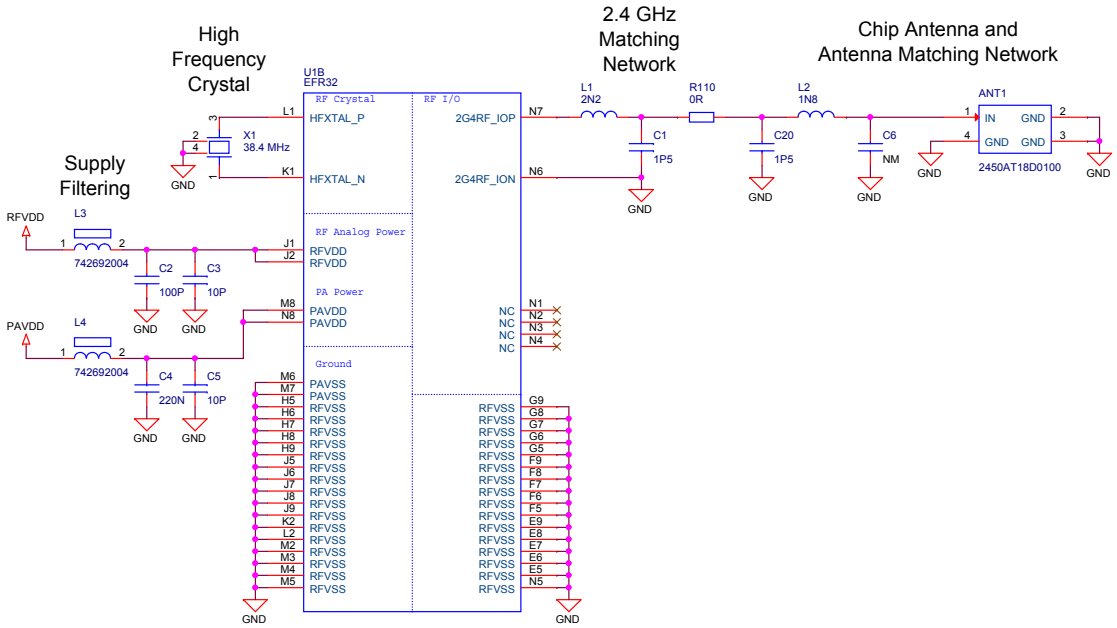

Figure 5.1. Schematic of the RF section

5.1.1 Description of the RF Matching

The impedance of the RF port of the EFR32MG12 is matched to 50 Ohm: the 2G4RF_ION pin is connected to ground while the 2G4RF_IOP pin is connected to a two-element impedance matching circuitry. The on-board ceramic antenna is also matched to 50 Ohm by its impedance matching components and connected to the EFR32MG12 through an optional 0 Ohm resistor.

5.1.2 RF Section Power Supply

On the BRD4166A the supply for the radio (RFVDD) and the power amplifier (PAVDD) is connected to the on-chip DC-DC converter. By default, the DC-DC converter provides 1.8 V for the entire RF section (for details, see the schematic of the BRD4166A).

5.1.3 RF Matching Bill of Materials

The Bill of Materials of the BRD4166A RF matching network is shown in the following table.

Table 5.1. Bill of Materials of the BRD4166A RF Matching Network

Component name	Value	Manufacturer	Part Number
L1	2.2 nH	Murata	LQP03TN2N2B02D
C1	1.5 pF	Murata	GRM0335C1E1R5CD01
C6 (optional)	10 pF	Murata	GRM0335C1E100JA01

5.1.4 Antenna

The BRD4166A has an on-board ceramic antenna.

The land pattern for the antenna on the PCB layout was designed based on the recommendations of the antenna datasheet. Due to the fact that there is significant difference between the layout (practically the board size) of the BRD4166A and the antenna evaluation board the applied antenna matching network deviates from the recommendation.

The values of the antenna matching network were fine tuned to match the antenna impedance close to 50 Ohm on the BRD4166A PCB. The resulting antenna impedance and reflection are shown in the figure below.

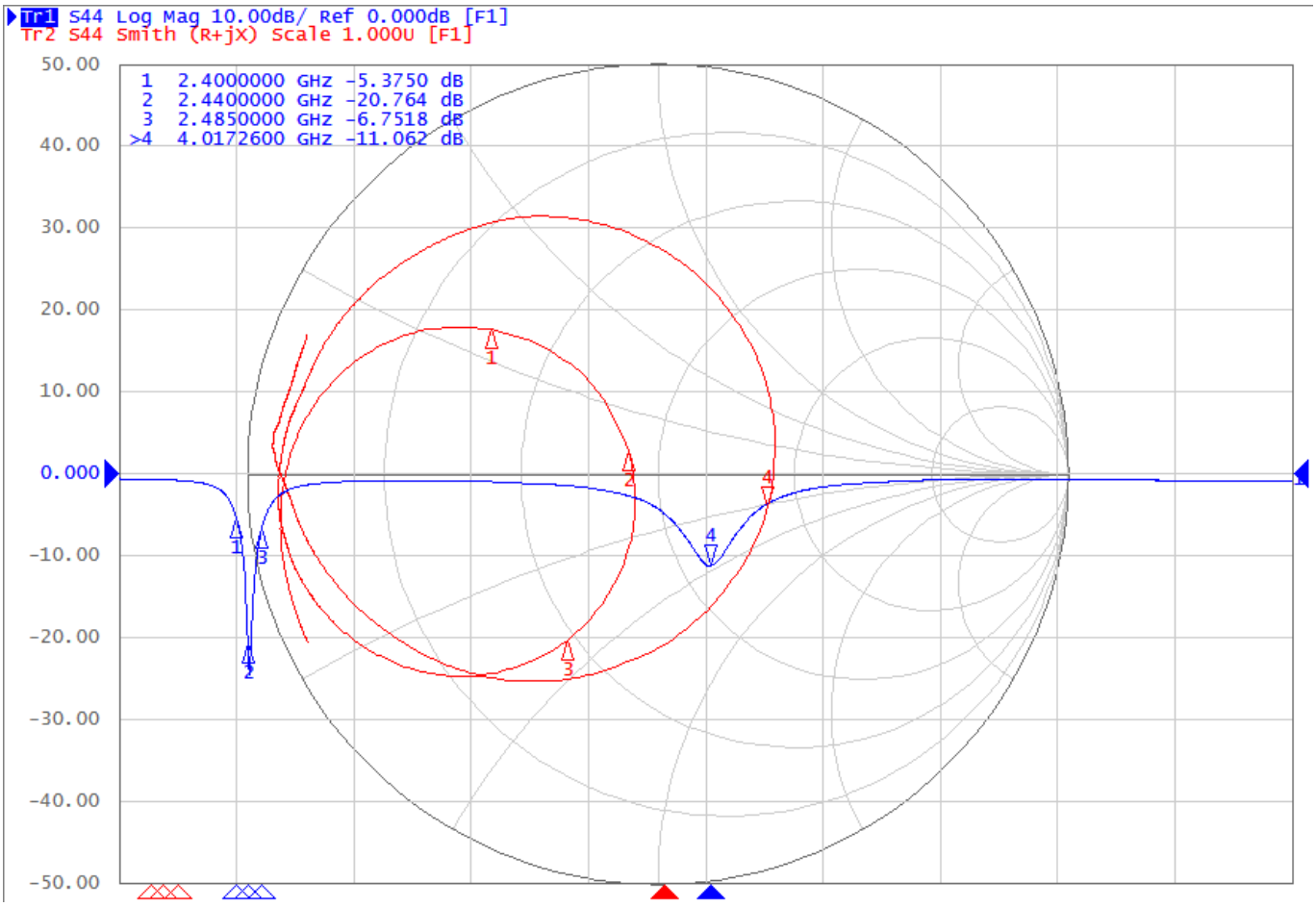

Figure 5.2. Fine Tuned Antenna Impedance (Red Curve) and Reflection (Blue Curve)

5.1.5 Antenna Matching Bill of Materials

The Bill of Materials of the BRD4166A antenna matching network is shown in the following table.

Table 5.2. Bill of Materials of the BRD4166A Antenna Matching Network

Component name	Value	Manufacturer	Part Number
ANT1	-	Johanson	2450AT18D0100
L2	3.9 nH	Murata	LQP03TN1N8B02D
C20	1.5 pF	Murata	GRM0335C1E1R5BA01D

5.2 EMC Regulations for 2.4 GHz

5.2.1 ETSI EN 300-328 Emission Limits for the 2400-2483.5 MHz Band

Based on ETSI EN 300-328 the allowed maximum fundamental power for the 2400-2483.5 MHz band is 20 dBm EIRP. For the unwanted emissions in the 1 GHz to 12.75 GHz domain the specified limit is -30 dBm EIRP.

5.2.2 FCC15.247 Emission Limits for the 2400-2483.5 MHz Band

FCC 15.247 allows conducted output power up to 1 Watt (30 dBm) in the 2400-2483.5 MHz band. For spurious emissions the limit is -20 dBc based on either conducted or radiated measurement, if the emission is not in a restricted band. The restricted bands are specified in FCC 15.205. In these bands the spurious emission levels must meet the levels set out in FCC 15.209. In the range from 960 MHz to the frequency of the 5th harmonic it is defined as 0.5 mV/m at 3 m distance (equals to -41.2 dBm in EIRP).

In case of operating in the 2400-2483.5 MHz band the 2nd, 3rd and 5th harmonics can fall into restricted bands so for those the -41.2 dBm limit should be applied. For the 4th harmonic the -20 dBc limit should be applied.

5.2.3 Applied Emission Limits

The FCC restricted band limits are radiated limits only. Besides that, Silicon Labs applies those to the conducted spectrum i.e. it is assumed that in case of a custom board an antenna is used which has 0 dB gain at the fundamental and the harmonic frequencies. In that theoretical case, based on the conducted measurement, the compliance with the radiated limits can be estimated.

The overall applied limits are shown in the table below.

Table 5.3. Applied Limits for Spurious Emissions

Harmonic	Frequency	Limit
2nd	4800~4967 MHz	-41.2 dBm
3rd	7200~7450.5 MHz	-41.2 dBm
4th	9600~9934 MHz	-30 dBm
5th	12000~12417.5 MHz	-41.2 dBm

5.3 Radiated Power Measurements

The output power of the EFR32MG12 was set to 10 dBm. The board was supplied through its USB connector by connecting to a PC through a USB cable.

During the measurements the board was rotated in three cuts, see the reference plane illustration in the figure below. The radiated powers of the fundamental and the harmonics were measured with horizontal and vertical reference antenna polarizations.

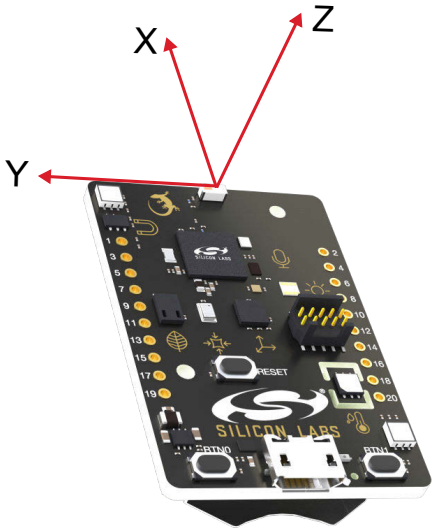

Figure 5.3. DUT Reference Planes

5.3.1 Maximum Radiated Power Measurement

The measured maximums of the fundamental and the harmonics are shown in the table below.

Table 5.4. Maximums of the Measured Radiated Powers of BRD4166A

2.405 GHz	EIRP [dBm]	Orientation	Margin [dB]	Limit in EIRP [dBm]
Fundamental	10.1	YZ/H	19.9	30
2nd harmonic	-47.5	XY/H	6.3	-41.2
3rd harmonic	<-50*	-/-	>10	-41.2
4th harmonic	<-50*	-/-	>20	-30
5th harmonic	<-50*	-/-	>10	-41.2
* Signal level is below the Spectrum Analyzer noise floor.				

As it can be observed the levels of the harmonics are far below the applied limit.

5.3.2 Antenna Pattern Measurement

The measured typical antenna patterns are shown in the figures below.

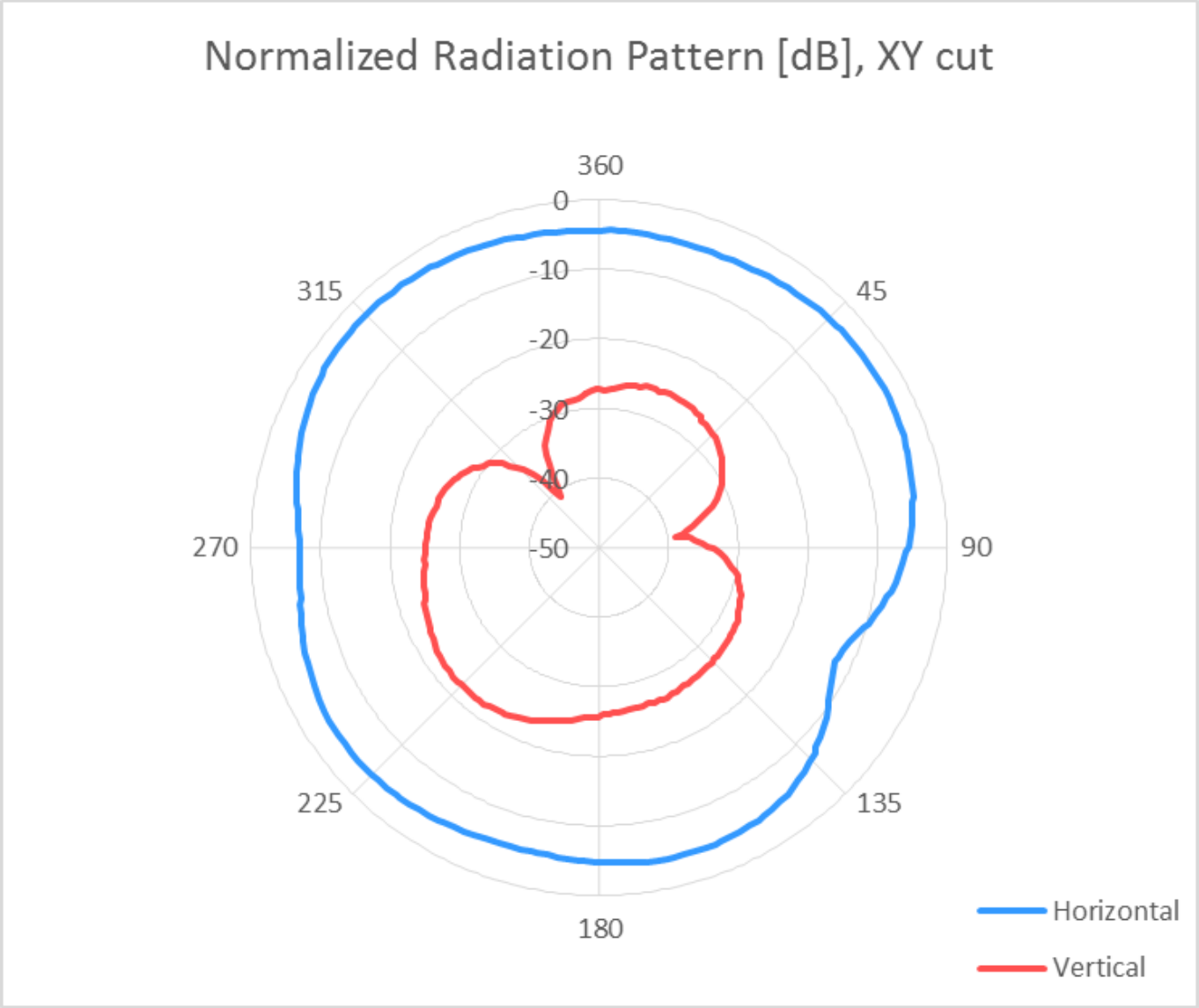

Figure 5.4. Antenna Pattern - XY

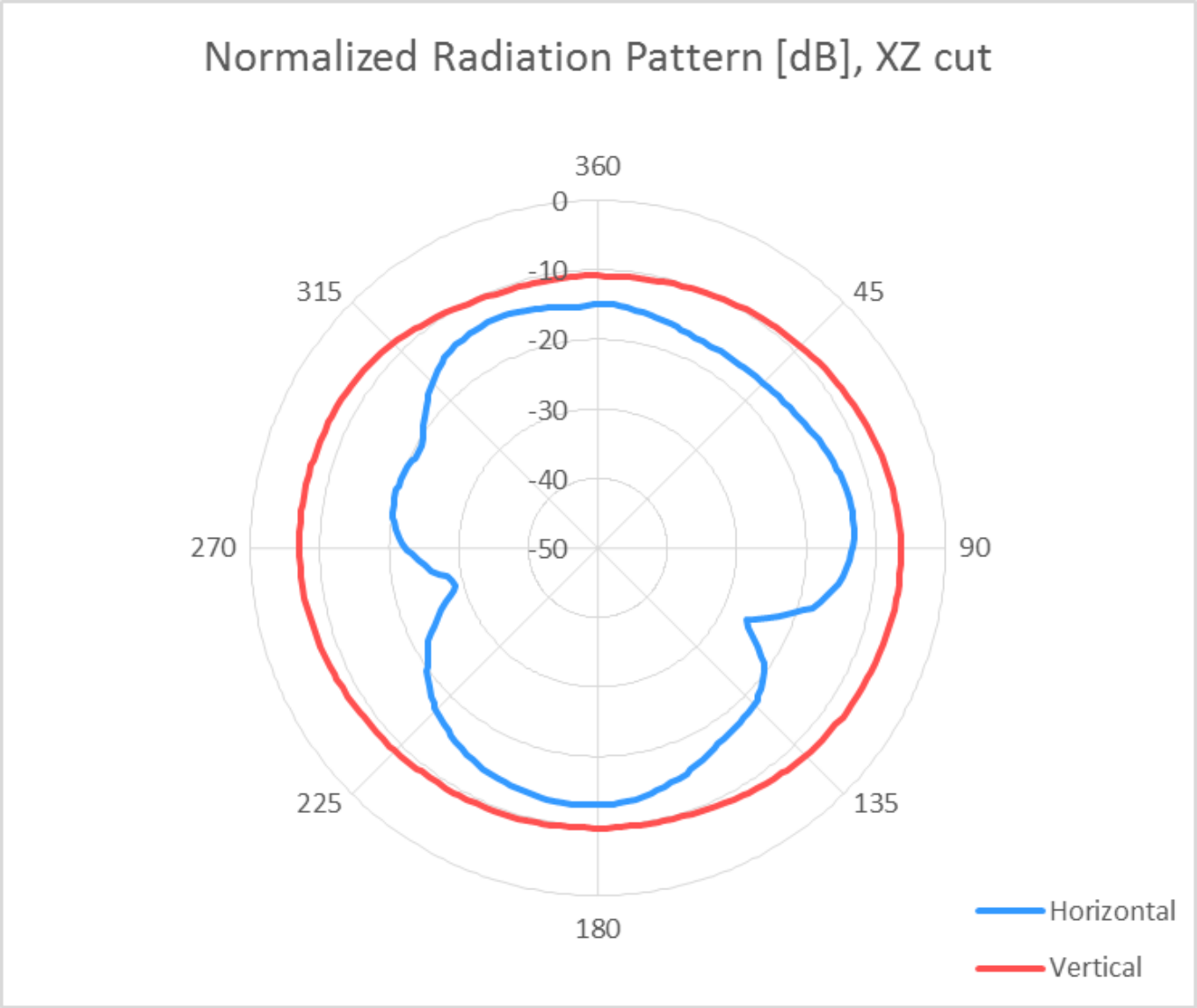

Figure 5.5. Antenna Pattern - XZ

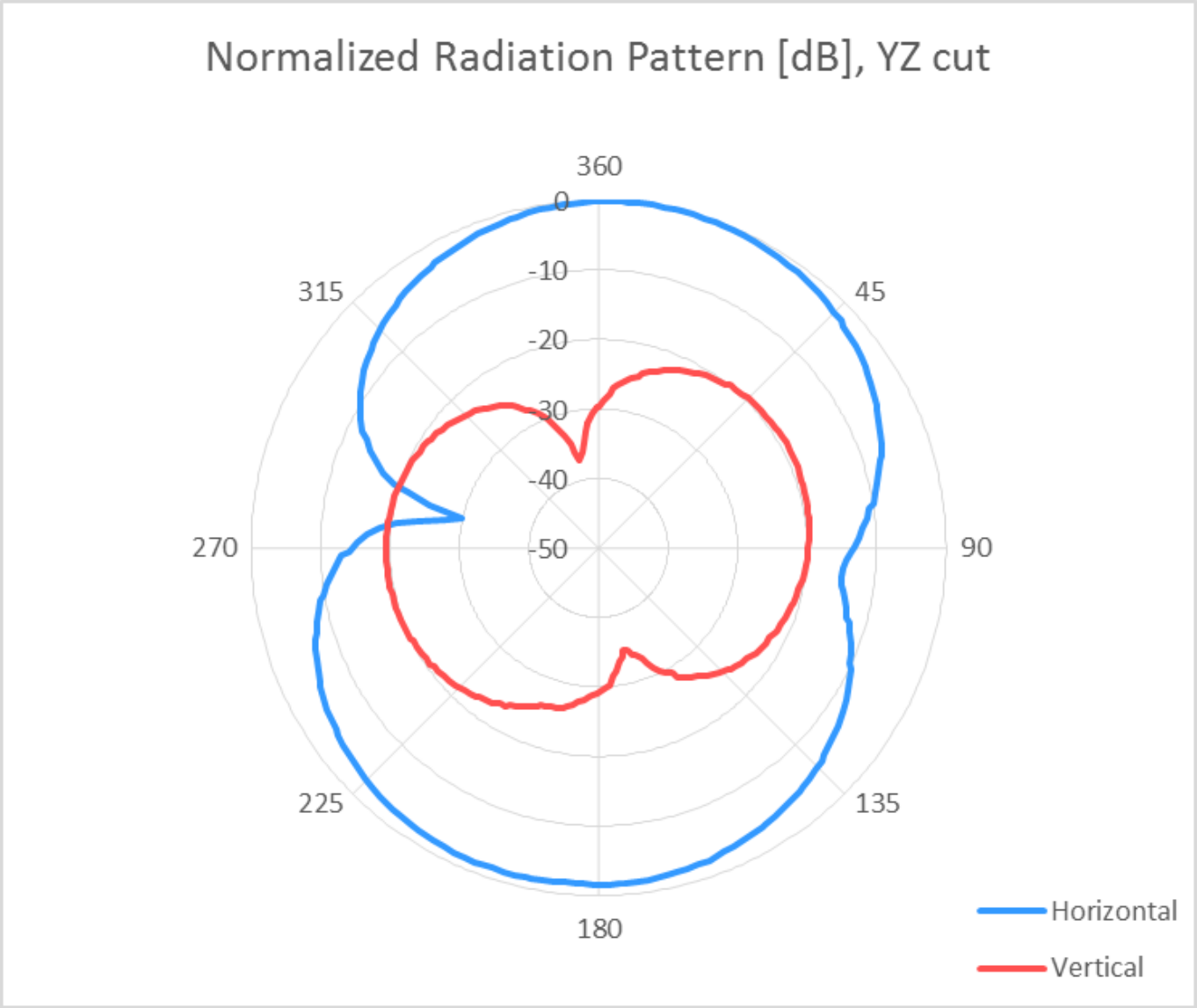

Figure 5.6. Antenna Pattern - YZ

5.4 EMC Compliance Recommendations

5.4.1 Recommendations for 2.4 GHz ETSI EN 300-328 Compliance

As it was shown in the previous chapter with the EFR32MG12 output power set to 10 dBm the radiated power of the fundamental of the BRD4166A complies with the 20 dBm limit of the ETSI EN 300-328. The harmonic emissions are under the -30 dBm limit with large margin.

5.4.2 Recommendations for 2.4 GHz FCC 15.247 Compliance

As it was shown in the previous chapter with the EFR32MG12 output power set to 10 dBm the radiated power of the fundamental of the BRD4166A complies with the 30 dBm limit of the FCC 15.247. The harmonic emissions are under the applied limits with large margin.

6. Schematics, Assembly Drawings and BOM

The schematics, assembly drawings and bill of materials (BOM) for the hardware included on the Thunderboard Sense 2 are available through Simplicity Studio when the kit documentation package has been installed.

7. Kit Revision History and Errata

7.1 Revision History

The kit revision can be found printed on the box label of the kit, as outlined in the figure below. The kit revision history is summarised in Table 7.1 Kit Revision History on page 34.

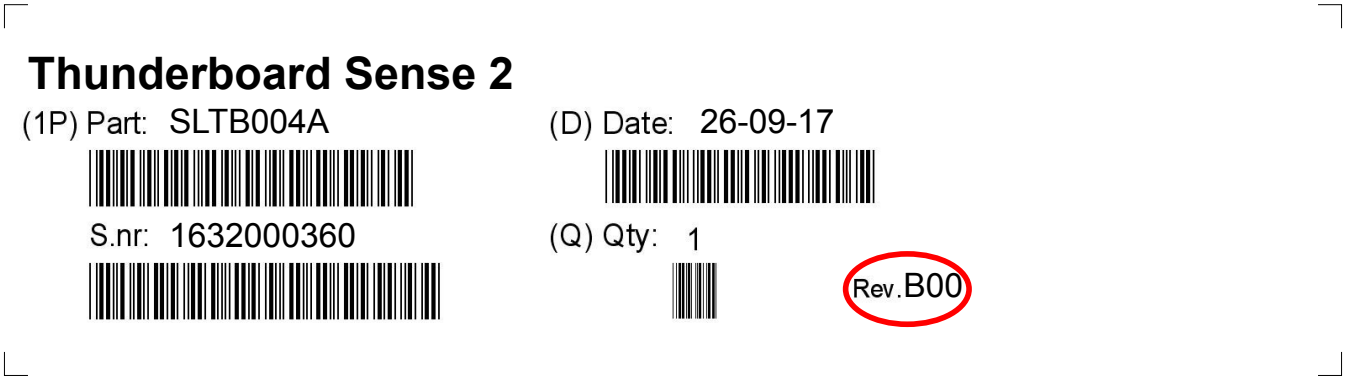

Figure 7.1. Revision Info

Table 7.1. Kit Revision History

Kit Revision	Released	Description
B00	2017-09-26	Updated to BRD4166A Rev. D00.
A01	2017-08-10	Initial version.

8. Board Revision History and Errata

8.1 Revision History

The board revision can be found laser printed on the board, and the board revision history is summarised in Table 8.1 Board Revision History on page 35.

Table 8.1. Board Revision History

Revision	Released	Description
D00	2017-09-26	Updated Si7210 revision. Changed IMU to ICM-20648.
C00	2017-04-04	Initial version.

8.2 Errata

Table 8.2. Board Errata

Board Revision	Problem	Description
C00	Si7210 Errata	The rev. C00 boards were fitted with an early revision A of the Si7210 Hall Effect Sensor. This version has an issue where a large negative field measurement turns positive.
C00	IMU draws additional current	The rev. C00 boards were fitted with an ICM-20948 instead of an ICM-20648. This results in an additional current draw when the IMU is enabled and the supply voltage VMCU is above 1.8 V.

9. Document Revision History

Revision 1.00

2017-09-27

Initial document version.

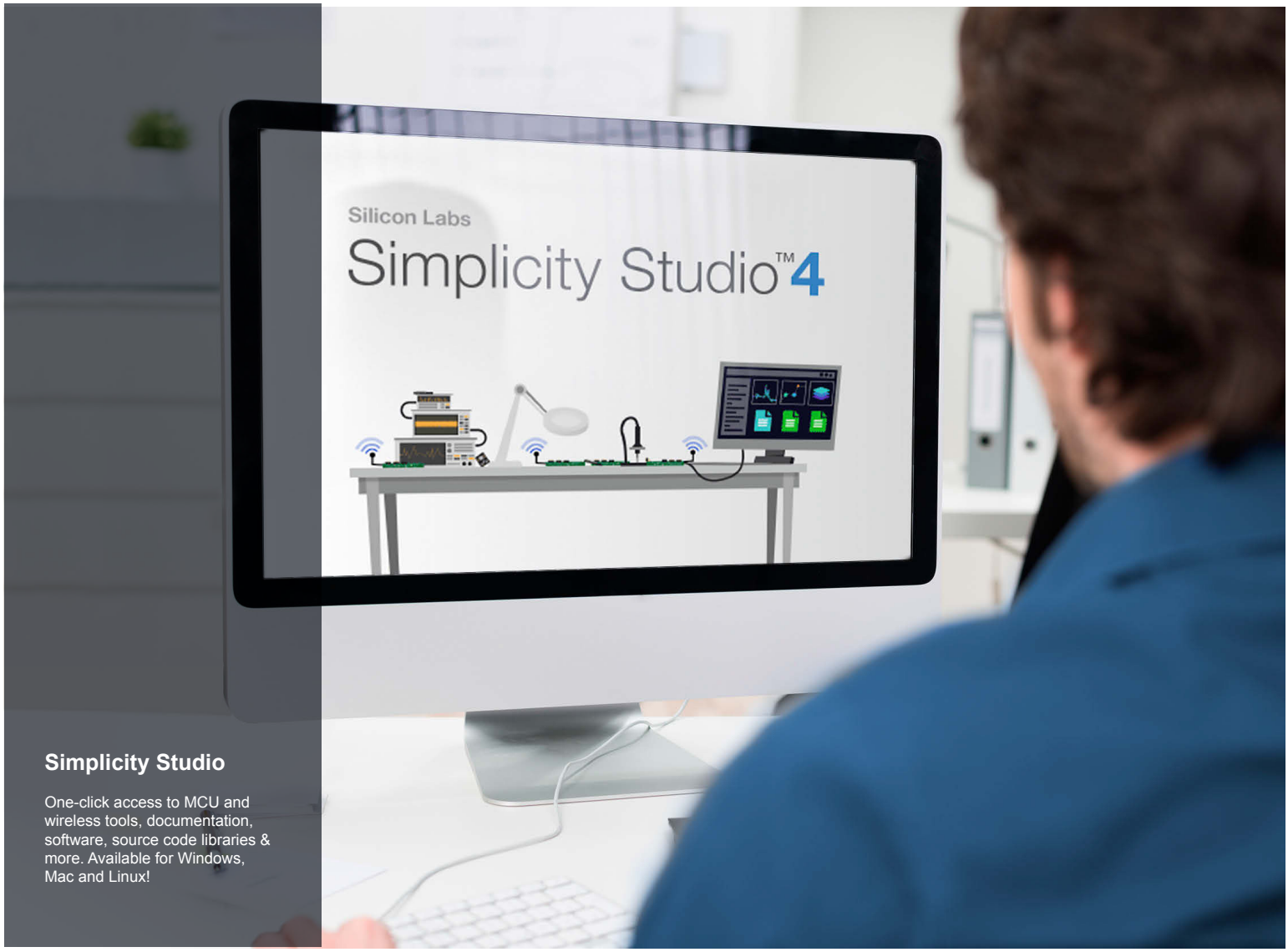

Simplicity Studio

One-click access to MCU and wireless tools, documentation, software, source code libraries & more. Available for Windows, Mac and Linux!

IoT Portfolio
www.silabs.com/IoT

SW/HW
www.silabs.com/simplicity

Quality
www.silabs.com/quality

Support and Community
community.silabs.com

Disclaimer
Silicon Labs intends to provide customers with the latest, accurate, and in-depth documentation of all peripherals and modules available for system and software implementers using or intending to use the Silicon Labs products. Characterization data, available modules and peripherals, memory sizes and memory addresses refer to each specific device, and "Typical" parameters provided can and do vary in different applications. Application examples described herein are for illustrative purposes only. Silicon Labs reserves the right to make changes without further notice and limitation to product information, specifications, and descriptions herein, and does not give warranties as to the accuracy or completeness of the included information. Silicon Labs shall have no liability for the consequences of use of the information supplied herein. This document does not imply or express copyright licenses granted hereunder to design or fabricate any integrated circuits. The products are not designed or authorized to be used within any Life Support System without the specific written consent of Silicon Labs. A "Life Support System" is any product or system intended to support or sustain life and/or health, which, if it fails, can be reasonably expected to result in significant personal injury or death. Silicon Labs products are not designed or authorized for military applications. Silicon Labs products shall under no circumstances be used in weapons of mass destruction including (but not limited to) nuclear, biological or chemical weapons, or missiles capable of delivering such weapons.

Trademark Information
Silicon Laboratories Inc.® , Silicon Laboratories®, Silicon Labs®, SiLabs® and the Silicon Labs logo®, Bluegiga®, Bluegiga Logo®, Clockbuilder®, CMEMS®, DSPLL®, EFM®, EFM32®, EFR, Ember®, Energy Micro, Energy Micro logo and combinations thereof, "the world's most energy friendly microcontrollers", Ember®, EZLink®, EZRadio®, EZRadioPRO®, Gecko®, ISOmodem®, Micrium, Precision32®, ProSLIC®, Simplicity Studio®, SiPHY®, Telegesis, the Telegesis Logo®, USBXpress®, Zentri and others are trademarks or registered trademarks of Silicon Labs. ARM, CORTEX, Cortex-M3 and THUMB are trademarks or registered trademarks of ARM Holdings. Keil is a registered trademark of ARM Limited. All other products or brand names mentioned herein are trademarks of their respective holders.

SILICON LABS

Silicon Laboratories Inc.
400 West Cesar Chavez
Austin, TX 78701
USA

http://www.silabs.com